SAND2001-0674
Unlimited Release
Printed March 2001

Updated to 1999 NEC (Minor Revisions 2/02)

Supersedes SAND96-2797
Dated December 1996

Photovoltaic Power Systems and the *National Electrical Code:* Suggested Practices

John Wiles
Southwest Technology Development Institute
New Mexico State University
1505 Payne Street
Las Cruces, NM 88003

ABSTRACT

This suggested practices manual examines the requirements of the *National Electrical Code (NEC)* as they apply to photovoltaic (PV) power systems. The design requirements for the balance of systems components in a PV system are addressed, including conductor selection and sizing, overcurrent protection ratings and location, and disconnect ratings and location. PV array, battery, charge controller, and inverter sizing and selection are not covered, as these items are the responsibility of the system designer, and they in turn determine the items in this manual. Stand-alone, hybrid, and utility-interactive PV systems are all covered. References are made to applicable sections of the *NEC.*

National Electrical Code® and *NEC* ® are registered trademarks of the National Fire Protection Association, Inc., Quincy, Massachusetts 02269

ACKNOWLEDGMENTS

Numerous persons throughout the photovoltaic industry reviewed the drafts of this manual and provided comments which are incorporated in this version. Particular thanks go to Joel Davidson, Mike McGoey and Tim Ball, George Peroni, Bob Nicholson, Mark Ralph and Ward Bower, Steve Willey, Tom Lundtveit, and all those who provided useful information at seminars on the subject. Appendix E is dedicated to John Stevens and Mike Thomas at Sandia National Laboratories. Document editing and layout by Ronald Donaghe, Southwest Technology Development Institute.

TECHNICAL COMMENTS TO:

John C. Wiles
Southwest Technology Development Institute
New Mexico State University
P.O. Box 30001/Dept. 3 SOLAR
1505 Payne Street
Las Cruces, New Mexico 88003-0001

Request for copies to Photovoltaic Systems Assistance Center at Sandia National Laboratories
505-844-4383

PURPOSE

This document is intended to contribute to the wide-spread installation of safe, reliable PV systems that meet the requirements of the *National Electrical Code*.

DISCLAIMER

This guide provides information on how the *National Electrical Code* (*NEC*) applies to photovoltaic systems. The guide is not intended to supplant or replace the *NEC*; it paraphrases the *NEC* where it pertains to photovoltaic systems and should be used with the full text of the *NEC*. Users of this guide should be thoroughly familiar with the *NEC* and know the engineering principles and hazards associated with electrical and photovoltaic power systems. The information in this guide is the best available at the time of publication and is believed to be technically accurate. Application of this information and results obtained are the responsibility of the user.

In most locations, all electrical wiring including photovoltaic power systems must be accomplished by a licensed electrician and then inspected by a designated local authority. Some municipalities have additional codes that supplement or replace the *NEC*. The local inspector has the final say on what is acceptable. In some areas, compliance with codes is not required.

NATIONAL FIRE PROTECTION ASSOCIATION (NFPA) STATEMENT

The *National Electrical Code* including the 1999 *National Electrical Code* is published and updated every three years by the National Fire Protection Association (NFPA), Batterymarch Park, Quincy, Massachusetts 02269. The *National Electrical Code* and the term *NEC* are registered trademarks of the National Fire Protection Association and may not be used without their permission. Copies of the current edition of the *National Electrical Code* are available from the NFPA at the above address, most electrical supply distributors, and many bookstores.

In most locations, all electrical wiring including photovoltaic power systems must be accomplished by a licensed electrician and then inspected by a designated local authority. Some municipalities have additional codes that supplement or replace the *NEC*. The local inspector has the final say on what is acceptable. In some areas, compliance with codes is not required.

Table of Contents

SUGGESTED PRACTICES....1

Introduction....1

Methods of Achieving Objectives....3

Scope and Purpose of the *NEC*....4

This Guide....5

Photovoltaic Modules....5

- Module Marking....6
- Module Interconnections....7
- Tracking Modules....8
- Terminals....8
- Transition Wiring....10

Wiring....12

- Module Connectors....12
- Module Connection Access....12
- Splices....12
- Conductor Color Codes....14
- Battery Cables....15

Ground-Fault Protection and Array Disablement....15

- Ground-Faults....15
- PV Array Installation and Service....16

Grounding....17

- Grounding—System....17
  - Size of Grounding Electrode Conductor....17
  - Point of Connection....18
  - Unusual Grounding Situations....19
  - Charge Controllers—System Grounding....20
- Grounding—Equipment....20
- Inverter AC Outputs....21
- Backup Generators....21
- Suggested AC Grounding....21
- Grounding Electrode....22

Conductor Ampacity....23

- Stand-Alone Systems—Inverters....25

Overcurrent Protection....26
Ampere Rating....26
Testing and Approval....27
Branch Circuits....29
Amperes Interrupting Rating (AIR)—Short-Circuit Conditions....31
Fusing of PV Source Circuits....32
Current-Limiting Fuses—Stand-Alone Systems....32
Current-Limiting Fuses—Grid-Connected Systems....33
Fuse Servicing....33
Disconnecting Means....34
Photovoltaic Array Disconnects....34
Equipment Disconnects....35
Battery Disconnect....35
Charge Controller Disconnects....37
Non-Grounded Systems....38
Multiple Power Sources....38
Panelboards, Enclosures, and Boxes....38
Batteries....38
Hydrogen Gas....39
Battery Rooms and Containers....39
Acid or Caustic Electrolyte....40
Electric Shock Potential....40
Generators....41
Charge Controllers....42
Inverters....43
Distribution Systems....44
Interior Wiring and Receptacles....48
Smoke Detectors....49
Ground-Fault Circuit Interrupters....49
Interior Switches....50
Multiwire Branch Circuits....50
AC PV Modules....53
System Labels and Warnings....53
Photovoltaic Power Source....53
Multiple Power Systems....54
Interactive System Point of Interconnection....54
Switch or Circuit Breaker....54
General....54

Inspections 55

Insurance 55

APPENDIX A A-1

Sources of Equipment Meeting the Requirements of The *National Electrical Code* A-1

Conductors A-1
Miscellaneous Hardware A-2
DC-Rated Fuses A-3
Fuse Holders (Also See Fused Disconnects) A-5
Fused Disconnects (Also See Circuit Breakers) A-5

Circuit Breakers A-6
Enclosures and Junction Boxes A-7
Hydrocaps A-7
Surge Arrestors A-8

APPENDIX B B-1

PV Module Operating Characteristics Drive NEC Requirements B-1

Introduction B-1
Unspecified Details B-2
NEC Requirements Based on Module Performance B-2
Voltage B-2
Current B-3

Additional *NEC* Requirements B-3
Summary B-4

APPENDIX C C-1

Grid-Connected Systems C-1

Inverters C-1
PV Source-Circuit Conductors C-1
Overcurrent Devices C-1
Disconnects C-2
Blocking Diodes C-2
Surge Suppression C-2

APPENDIX D D-1

Cable and Device Ratings at High Voltages D-1

Equipment Ratings D-1
NEC Voltage Limitation D-4

Voltage Remedies D-4

APPENDIX E E-1

Example Systems E-1

Cable Sizing and Overcurrent Protection E-1

APPENDIX F F-1

DC Currents on Single-Phase Stand-alone Inverters F-1

INDEX Index-1

List of Figures

Figure 1. Strain Reliefs....6
Figure 2. Label on Typical PV Module....7
Figure 3. Terminal Crimpers....9
Figure 4. Insulated and Uninsulated Terminals....10
Figure 5. Listed Rain-proof Junction Box with Listed, Custom Terminal Strip....11
Figure 6. Module Interconnect Methods....13
Figure 7. Power Splicing Blocks and Terminal Strips....14
Figure 8. Typical System: Possible Grounding Conductor Locations....18
Figure 9. Example Grounding Electrode System....23
Figure 10. Typical Array Conductor Overcurrent Protection (with Optional Subarray Disconnects)....28
Figure 11. Listed Branch-Circuit Rated Breakers....28
Figure 12. Listed Branch Circuit and Supplemental Fuses....29
Figure 13. Unacceptable Fuses (left) and Acceptable Fuses (right) when DC-rated....30
Figure 14. UL-Recognized and Listed Circuit Breakers....31
Figure 15. Small System Disconnects....36
Figure 16. Separate Battery Disconnects....36
Figure 17. Charge Controller Disconnects....37
Figure 18. Disconnects for Remotely Located Power Sources....42
Figure 19. Typical Charge Controller....43
Figure 20. 12-Volt DC Load Center....46
Figure 21. 12-Volt DC Combining Box and Load Center....47
Figure 22. NEMA Plug Configurations....48
Figure 23. Diagram of a Multiwire Branch Circuit....52
Figure D-1. Typical Bipolar System with Fault....D-3
Figure E-1. Direct Connected System....E-4
Figure E-2. Direct-Connected PV System with Current Booster....E-5
Figure E-3. Stand-Alone Lighting System....E-7
Figure E-4. Remote Cabin DC-Only System....E-9
Figure E-5. Small Residential Stand-Alone System....E-12

Figure E-6. Medium Sized Residential Hybrid System E-15
Figure E-7. Roof-Top Grid-Connected System E-18
Figure E-8. Center-Tapped PV System..... E-20
Figure F-1. Inverter Current Waveform (dc side)..... F-1

APPLICABLE ARTICLES
from the
NATIONAL ELECTRICAL CODE

Although most portions of the *National Electrical Code* apply to all electrical power systems, including photovoltaic power systems, those listed below are of particular significance.

Article	Contents
90	Introduction
100	Definitions
110	Requirements
200	Grounded Conductors
210	Branch Circuits
240	Overcurrent Protection
250	Grounding
300	Wiring Methods
310	Conductors for General Wiring
336	Nonmetallic Sheathed Cable
338	Service Entrance Cable
339	Underground Feeders
340	Power and Control Tray Cable: Type TC
347	Rigid Nonmetallic Conduit
351	Liquidtight Flexible Metal Conduit and Liquidtight Flexible Nonmetallic Conduit
374	Auxiliary Gutters
384	Switchboards and Panelboards
445	Generators
480	Storage Batteries
490	Equipment, Over 600 Volts
690	Solar Photovoltaic Systems
705	Interconnected Electric Power Production Sources
720	Low-Voltage Systems

SUGGESTED PRACTICES

OBJECTIVE

- SAFE, RELIABLE, DURABLE PHOTOVOLTAIC POWER SYSTEMS
- KNOWLEDGEABLE MANUFACTURERS, DEALERS, INSTALLERS, CONSUMERS, AND INSPECTORS

METHOD

- WIDE DISSEMINATION OF THESE SUGGESTED PRACTICES
- TECHNICAL INTERCHANGE BETWEEN INTERESTED PARTIES

Introduction

The National Fire Protection Association has acted as sponsor of the *National Electrical Code (NEC)* since 1911. The original Code document was developed in 1897. With few exceptions, electrical power systems installed in the United States in this century have had to comply with the *NEC*. This includes many photovoltaic (PV) power systems. In 1984, Article 690, which addresses safety standards for installation of PV systems, was added to the Code. This article has been revised and expanded in the 1987, 1990, 1993, 1996, and 1999 editions.

Many of the PV systems in use and being installed today may not be in compliance with the *NEC* and other local codes. There are several contributing factors to this situation:

Factors that have reduced local and *NEC* compliance

- The PV industry has a strong “grass roots,” do-it-yourself faction that is not fully aware of the dangers associated with low-voltage and high-voltage, direct-current (dc), PV-power systems.
- Some people in the PV community may believe that PV systems below 50 volts are not covered by the *NEC*.
- Electricians and electrical inspectors have not had significant experience with direct-current portions of the Code or PV power systems.

- The electrical equipment industries do not advertise or widely distribute equipment suitable for dc use that meets *NEC* requirements.
- Popular publications are presenting information to the public that implies that PV systems are easily installed, modified, and maintained by untrained personnel.
- Photovoltaic equipment manufacturers have, in some cases, been unable to afford the costs associated with testing and listing by approved testing laboratories like Underwriters Laboratories or ETL.
- Photovoltaic installers and dealers in many cases have not had significant experience installing ac residential and/or commercial power systems.

Some PV installers in the United States are licensed electricians or use licensed electrical contractors and are familiar with all sections of the *NEC*. These installer/contractors are trained to install reliable PV systems that meet the *NEC* and minimize the hazards associated with electrical power systems. Some PV installations have numerous defects that typically stem from unfamiliarity with electrical power system codes or unfamiliarity with dc currents and power systems. They often do not meet the requirements of the *NEC*. Some of the more prominent problems are listed below.

Observed PV installation problems

- Improper ampacity of conductors
- Improper type of conductors
- Unsafe wiring methods
- Lack of overcurrent protection on conductors
- Inadequate number and placement of disconnects
- Improper application of listed equipment
- No, or underrated, short-circuit or overcurrent protection on battery systems
- Use of non-approved components when approved components are available
- Improper system grounding
- Lack of, or improper, equipment grounding
- Use of underrated components
- Use of ac components (fuses and switches) in dc applications

The *NEC* may apply to any PV systems regardless of size or location. A single, small PV module may not present a significant hazard, and a small system in a remote location may present few safety hazards because people are seldom in the area. On the other hand, two or three modules

connected to a battery can be lethal if not installed and operated properly. A single deep-cycle storage battery (6 volts, 220 amp-hours) can discharge about 8,000 amps into a short-circuit. Systems with voltages of 50 volts or higher present shock hazards. Short circuits on lower voltage systems present fire and equipment hazards. Storage batteries can be dangerous; hydrogen gas and acid residue from lead-acid batteries **must** be dealt with safely.

The problems are compounded because, unlike ac systems, there are few UL-Listed components that can be easily “plugged” together to make a PV system. Connectors and devices do not have mating inputs or outputs, and the knowledge and understanding of "what works with what" is not second nature to the installer. The dc “cookbook” of knowledge does not yet exist.

Methods of Achieving Objectives

To meet the objective of safe, reliable, durable photovoltaic power systems, the following suggestions are presented:

Safe...

Reliable...

Durable...

- Dealer-installers of PV systems should become familiar with the *NEC* methods of wiring residential and commercial ac power systems.
- All PV installations should be inspected, where required, by the local inspection authority in the same manner as other equivalent electrical systems.
- Photovoltaic equipment manufacturers should build equipment to meet UL or other recognized standards and have equipment tested and listed.
- Listed subcomponents should be used in assembled equipment where formal testing and listing is not possible.
- Electrical equipment manufacturers should produce, distribute, and advertise, listed, reasonably priced, dc-rated components.
- Electrical inspectors should become familiar with dc and PV systems.
- The PV industry should educate the public, modify advertising, and encourage all installers to comply with the *NEC*.
- Existing PV installations should be upgraded to comply with the *NEC* or modified to meet minimum safety standards.

Scope and Purpose of the *NEC*

Some local inspection authorities use regional electrical codes, but most jurisdictions use the *National Electrical Code*–sometimes with slight modifications. The *NEC* states that adherence to the recommendations made will reduce the hazards associated with electrical installations. The *NEC* also says these recommendations may not lead to improvements in efficiency, convenience, or adequacy for good service or future expansion of electrical use [90-1]. (Numbers in brackets refer to sections in the 1999 *NEC*.)

The *National Electrical Code* addresses nearly all PV power installations, even those with voltages less than 50 volts [720]. It covers stand-alone and grid-connected systems. It covers billboards, other remote applications, floating buildings, and recreational vehicles (RV) [90-2(a), 690]. The Code deals with any PV system that produces power and has external wiring or electrical components or contacts accessible to the untrained and unqualified person.

There are some exceptions. The *National Electrical Code* does not cover PV installations in automobiles, railway cars, boats, or on utility company properties used for power generation [90-2(b)]. It also does not cover micropower systems used in watches, calculators, or self-contained electronic equipment that have no external electrical wiring or contacts.

Article 690 of the *NEC* specifically deals with PV systems, but many other sections of the *NEC* contain requirements for any electrical system including PV systems [90-2, 720]. When there is a conflict between Article 690 of the *NEC* and any other article, Article 690 takes precedence [690-3].

The *NEC* suggests, and most inspection officials require, that equipment identified, listed, labeled, or tested by an approved testing laboratory be used when available [90-7,100,110-3]. Two of the several national testing organizations commonly acceptable to most jurisdictions are the *Underwriters Laboratories (*UL*)*, and ETL Testing Laboratories, Inc. *Underwriters Laboratories* and UL are registered trademarks of Underwriters Laboratories Inc., 333 Pfingsten Road, Northbrook, IL 60062.

Most building and electrical inspectors expect to see UL on electrical products used in electrical systems in the United States. This presents a problem for some in the PV industry, because low production rates do not yet justify the costs of testing and listing by UL or other laboratory. Some manufacturers claim their product specifications exceed those required by the testing organizations, but inspectors readily admit to not having the expertise, time, or funding to validate these unlabeled items.

This Guide

The recommended installation practices contained in this guide progress from the photovoltaic modules to the electrical outlets. For each component, *NEC* requirements are addressed, and the appropriate Code sections are referenced in brackets. A sentence, phrase, or paragraph followed by a *NEC* reference refers to a requirement established by the *NEC*. The words "will," "**shall**," or "**must**" also refer to *NEC* requirements. Suggestions based on field experience with PV systems are worded as such and will use the word "should." The recommendations apply to the use of listed products. The word "Code" in this document refers to the *NEC*.

Appendix A provides a limited list of sources for dc-rated and identified, listed, or approved products, and reference to the products is made as they are discussed.

Other appendices address details and issues associated with implementing the *NEC* in PV installations. Examples are included.

Photovoltaic Modules

Numerous PV module manufacturers offer listed modules at the present time. Other manufacturers are considering having their PV modules listed by an acceptable testing laboratory.

Methods of connecting wiring to the modules vary from manufacturer to manufacturer. The *NEC* does not require conduit, but local jurisdictions, particularly in commercial installations, may require conduit. The Code requires that strain relief be provided for connecting wires. If the module has a closed weatherproof junction box, strain relief and moisture-tight clamps should be used in any knockouts provided for field wiring. Where the weather-resistant gaskets are a part of the junction box, the manufacturer's instructions **must** be followed to ensure proper strain relief and weatherproofing [110-3(b), UL *Standard 1703*]. Figure 1 shows various types of strain relief clamps. The one on the left is a basic cable clamp for interior use with nonmetallic sheathed cable (Romex®) that cannot be used for module wiring. The clamps in the center (T&B) and on the right (Heyco) are watertight and can be used with either single or multiconductor cable—depending on the insert.

Figure 1. Strain Reliefs

MODULE MARKING

Certain electrical information **must** appear on each module. The information on the factory-installed label will include the following items:

Manufacturer supplied information

- Polarity of output terminals or leads
- Maximum series fuse for module protection
- Rated open-circuit voltage
- Rated operating voltage
- Rated operating current
- Rated short-circuit current
- Rated maximum power
- Maximum permissible system voltage [690-51]

Although not required by the *NEC*, the temperature rating of the module terminals and conductors are given to determine the temperature rating of the insulation of the conductors and how the ampacity of those conductors **must** be derated for temperature [110-14(c)]. Figure 2 shows a typical label that appears on the back of a module.

Note: Other critical information, such as mechanical installation instructions, tolerances of indicated values of Isc, Voc and Pmax, and statements on artificially concentrated sunlight are contained in the installation and assembly instructions for the module.

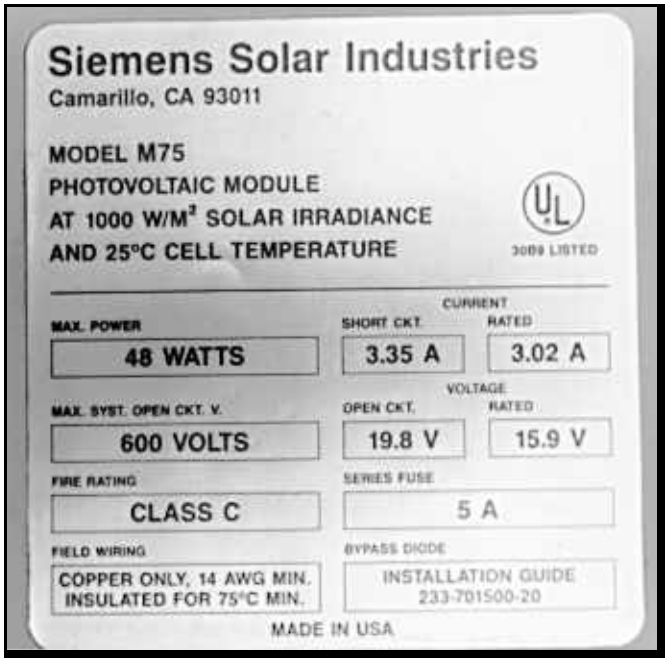

Figure 2. Label on Typical PV Module

MODULE INTERCONNECTIONS

Copper conductors are recommended for almost all photovoltaic system wiring [110-5]. Copper conductors have lower voltage drops and good resistance to corrosion. Aluminum or copper-clad aluminum wires can be used in certain applications, but the use of such cables is not recommended—particularly in dwellings. All wire sizes presented in this guide refer to copper conductors.

The *NEC* requires 12 American Wire Gage (AWG) or larger conductors to be used with systems under 50 volts [720-4]. Article 690 ampacity calculations yielding a smaller conductor size might override Article 720 considerations, but some inspectors are using the Article 720 requirement for dc circuits. The Code has little information for conductor sizes smaller than 14 AWG, but Section 690-31d provides some guidance.

Single-conductor, Type UF (Underground Feeder — Identified (marked) as Sunlight Resistant), Type SE (Service Entrance), or Type USE (Underground Service Entrance) cables are permitted for module interconnect wiring [690-31(b)]. Stranded wire is suggested to ease servicing of the modules after installation and for durability [690-34]. Unfortunately, single-conductor, stranded, UF sunlight-resistant cable is not readily available and may have only a 60°C temperature rating. This insulation is not suitable for long-term exposure to direct sunlight at temperatures likely to occur near PV modules. Such wire has shown signs of deterioration after four years of exposure. Temperatures exceeding 60°C normally occur in the vicinity of the modules; therefore, conductors with 60°C insulation cannot be used.

The widely available Underground Service Entrance Cable (USE-2) is suggested as the best cable to use for module interconnects. When manufactured to the UL Standards, it has a 90°C temperature rating and is sunlight resistant even though not commonly marked as such. The "-2" marking indicates at wet-rated 90°C insulation, the preferred rating. Additional markings indicating XLP or XLPE (cross-linked polyethylene) and RHW-2 (90°C insulation when wet) ensure that the highest quality cable is being used [Tables 310-13,16, and 17]. USE-2 is acceptable to most electrical inspectors. The RHH and RHW-2 designations frequently found on USE-2 cable allow its use in conduit inside buildings. USE or USE-2 cables, without the other markings, do not have the fire-retardant additives that SE cable has and cannot be used inside buildings.

The temperature derated ampacity of conductors at any point **must** be at least 156% of the module (or array of parallel modules) rated short-circuit current at that point [690-8(a), (b)]. If flexible, two-conductor cable is needed, electrical tray cable (Type TC) is available but **must** be supported in a specific manner as outlined in the *NEC* [318 and 340]. TC is sunlight resistant and is generally marked as such. Although frequently used for module interconnections, SO, SOJ, and similar flexible, portable cables and cordage may not be sunlight resistant and are not approved for fixed (non-portable) installations [400-7, 8].

TRACKING MODULES

Where there are moving parts of an array, such as a flat-plate tracker or concentrating modules, the *NEC* does allow the use of flexible cords and cables [400-7(a), 690-31(c)]. When these types of cables are used, they should be selected for extra-hard usage with full outdoor ratings (marked "WA" on the cable). They should not be used in conduit. Temperature derating information is provided by Table 690-31c. A derating factor in the range of 0.33 to 0.58 should be used for flexible cables used as module interconnects.

Trackers in PV systems operate at relatively slow angular rates and with limited motion. Normal stranded wire (USE-2 or THWN-2 in flexible conduit) has demonstrated good performance without deterioration due to flexing.

Another possibility is the use of extra flexible (400+ strands) building cable type USE-RHH-RHW or THW. This cable is available from the major wire distributors (Appendix A). Cable types, such as THW or RHW that are not sunlight resistant should be installed in flexible liquidtight conduit.

TERMINALS

Module junction boxes have various types of terminals or pigtail leads (with and without connectors). The instructions furnished with each module will state the

acceptable size and type of wires for use with the terminals. Some modules may require the use of crimp-on terminals when stranded conductors are used.

Light-duty crimping tools designed for crimping smaller wires used in electronic components usually do not provide sufficient force to make long-lasting crimps on connectors for PV installations even though they may be sized for 12-10 AWG. Insulated terminals crimped with these light-duty crimpers frequently develop high-resistance connections in a short time and may even fail as the wire pulls out of the terminal. It is strongly suggested that only listed, heavy-duty industrial-type crimpers be used for PV system wiring where crimp-on terminals are required. Figure 3 shows four styles of crimpers. On the far left is a stripper/crimper used for electronics work that will crimp only insulated terminals. Second from the left is a stripper/crimper that can make crimps on both insulated and uninsulated terminals. The pen points to the dies used for uninsulated terminals. With some care, this crimper can be used to crimp uninsulated terminals on PV systems. The two crimpers on the right are listed, heavy-duty industrial designs with ratcheting jaws and interchangeable dies that will provide the highest quality connections. They are usually available from electrical supply houses.

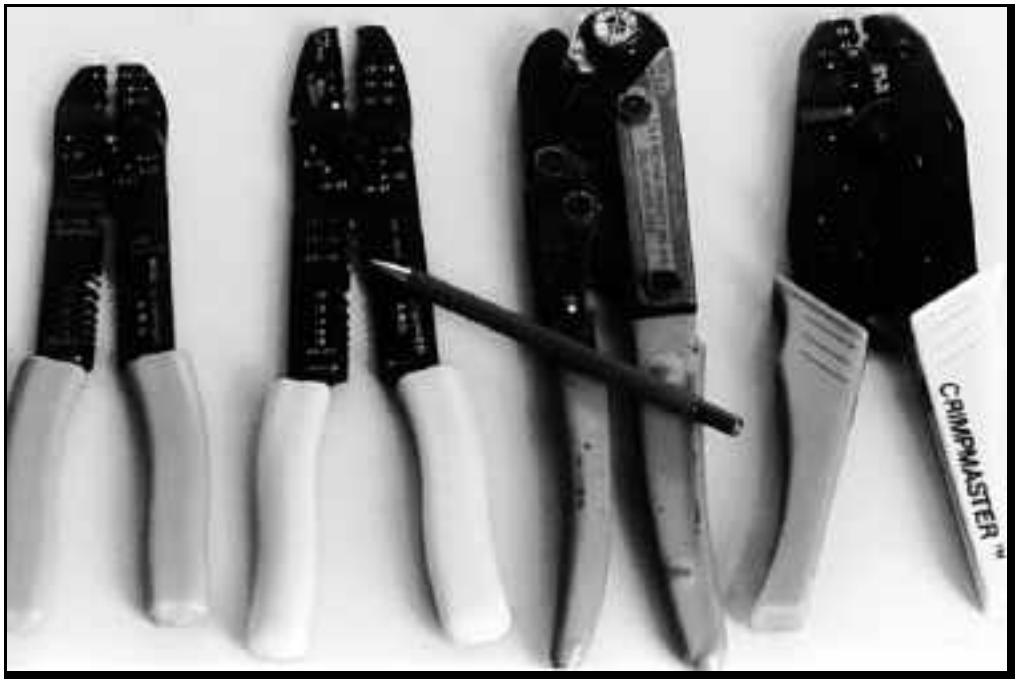

Figure 3. Terminal Crimpers

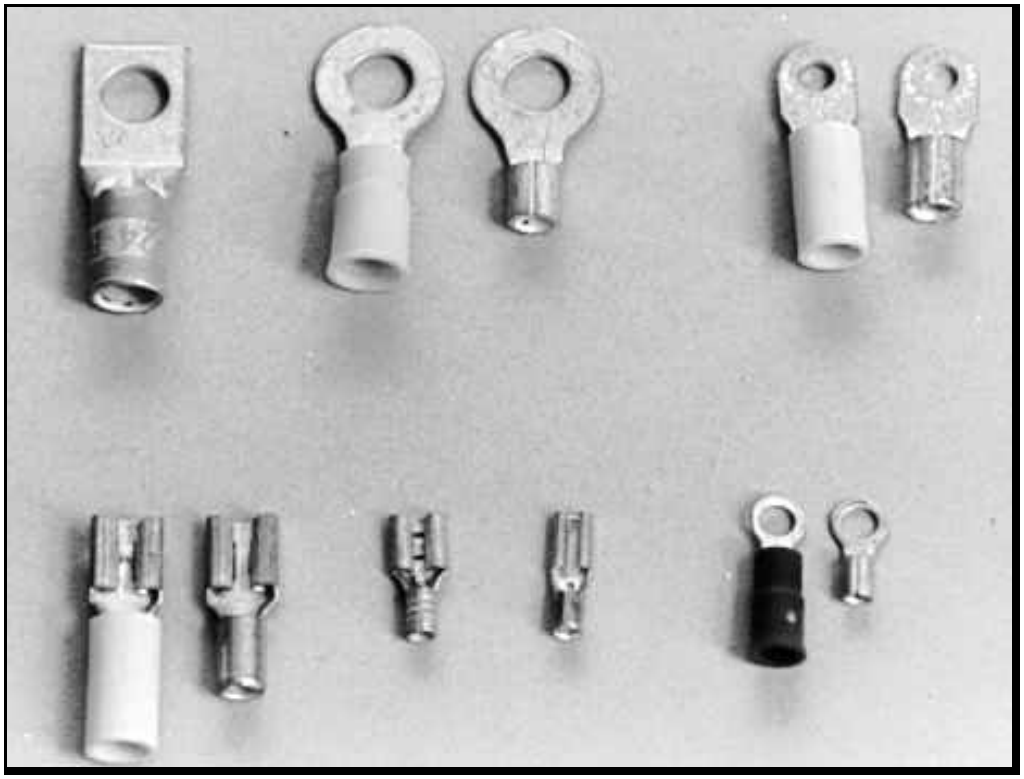

Figure 4. Insulated and Uninsulated Terminals

Figure 4 shows some examples of insulated and uninsulated terminals. In general, uninsulated terminals are preferred (with insulation applied later if required), but care **must** be exercised to obtain the heavier, more reliable UL-Listed terminals and not unlisted electronic or automotive grades. Again, an electrical supply house rather than an electronic or automotive parts store is the place to find the required items. Listed terminals are listed only when installed using the instructions supplied with the terminals and when used with the related crimping tool (usually manufactured by the same manufacturer as the terminals. If the junction box provides box-style pressure terminals, it is not necessary to use crimped terminals.

TRANSITION WIRING

Because of the relatively high cost of USE-2 and TC cables and wire, they are usually connected to less expensive cable at the first junction box leading to an interior location. All PV system wiring **must** be made using one of the methods included in the *NEC* [690-31, Chapter 3]. Single-conductor, exposed wiring is not permitted except for module wiring or with special permission [Chapter 3]. The most common methods used for PV systems are individual conductors in electrical metallic tubing (EMT), nonmetallic conduit, or nonmetallic sheathed cable.

Where individual conductors are used in conduit, they should be conductors with at least 90°C insulation such as RHW-2, THW-2, THWN-2 or XHHW-2. Conduits installed in exposed locations are considered to be installed in wet locations [100-Locations]. These conduits may have water entrapped in low spots and therefore only conductors with wet ratings are acceptable in conduits that are located in exposed or buried locations. The conduit can be either thick-wall (rigid, galvanized-steel, RGS or intermediate, metal-conduit, IMC) or thin-wall electrical metallic tubing (EMT) [348], and if rigid, nonmetallic conduit is used, electrical (gray) PVC (Schedule 40 or Schedule 80) rather than plumbing (white) PVC tubing **must** be used [347].

Two-conductor (with ground) UF cable (a jacketed or sheathed cable) that is marked sunlight resistant is frequently used between the module interconnect wiring and the PV disconnect device. Splices from the conductors from the modules to this wire when located outside **must** be protected in rain-proof junction boxes such as NEMA type 3R. Cable clamps **must** also be used. Figure 5 shows a rain-proof box with a pressure connector terminal strip installed for module wiring connections. Cable clamps used with this box **must** be listed for outdoor use.

Figure 5. Listed Rain-proof Junction Box with Listed, Custom Terminal Strip

Interior exposed cable runs can also be made with sheathed, multi-conductor cable types such as NM, NMB, and UF. The cable should not be subjected to physical abuse. If abuse is possible, physical protection **must** be provided [300-4,

336 B, 339]. Exposed, single-conductor cable (commonly used between batteries and inverters) **shall not** be used—except as module interconnect conductors [300-3(a)]. Battery-to-inverter cables are normally single-conductor cables installed in conduit.

Wiring

MODULE CONNECTORS

Module connectors that are concealed at the time of installation **must** be able to resist the environment, be polarized, and be able to handle the short-circuit current. They **shall** also be of a latching design with the terminals guarded. The equipment-grounding member, if used, **shall** make first and break last [690-32, 33]. The UL standard also requires that the connectors for positive and negative conductors should not be interchangeable.

MODULE CONNECTION ACCESS

All junction boxes and other locations where module wiring connections are made **shall** be accessible. Removable modules and stranded wiring may allow accessibility [690-34]. The modules should not be permanently fixed (welded) to mounting frames, and solid wire that could break when modules are moved to service the junction boxes should not be used. Open spaces behind the modules would allow access to the junction boxes.

SPLICES

All splices (other than the connectors mentioned above) **must** be made in approved junction boxes with an approved splicing method. Conductors **must** be twisted firmly to make a good electrical and mechanical connection, then brazed, welded, or soldered, and then taped [110-14(b)]. Mechanical splicing devices such as split-bolt connectors or terminal strips are also acceptable. Crimped splicing connectors may also be used if listed splicing devices and listed, heavy-duty crimpers are used.

Properly used box-type pressure connectors (Figure 7) give high reliability. Fuse blocks, fused disconnects, and circuit breakers are available with these pressure connectors.

Twist-on wire connectors (approved for splicing wires), when listed for the environment (dry, damp, wet, or direct burial) are acceptable splicing devices. In most cases, they **must** be used inside enclosures, except when used in direct-burial applications.

Where several modules are connected in series and parallel, a terminal block or bus bar arrangement **must** be used so that one source circuit can be disconnected without disconnecting the grounded (on grounded systems) conductor of other source circuits [690-4(c)]. On grounded systems, this indicates that the popular "Daisy Chain" method of connecting modules may not always be acceptable, because removing one module in the chain may disconnect the grounded conductor for all of those modules in other parallel chains or source circuits. This becomes more critical on larger systems where paralleled sets of long series strings of modules are used. Figure 6 shows unacceptable and acceptable methods. Generally, 12- and 24-volt systems can be daisy chained, but higher voltage systems should not be.

Several different types of terminal blocks and strips are shown in Figure 7. The larger blocks are made by Marathon (Appendix A). Any terminal block used **must** be listed for "field-installed wiring." Many are only "Recognized" by UL for use inside factory assembled, listed devices.

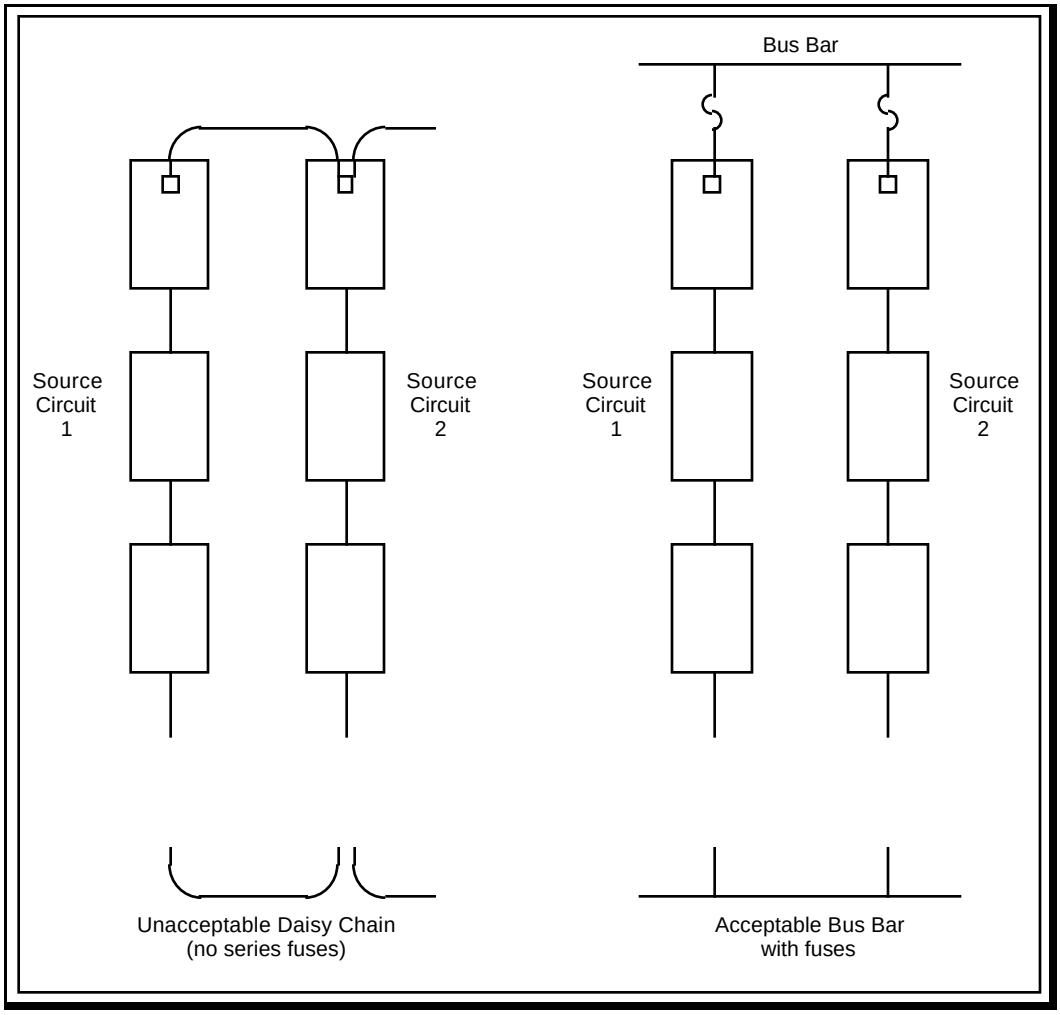

Figure 6. Module Interconnect Methods

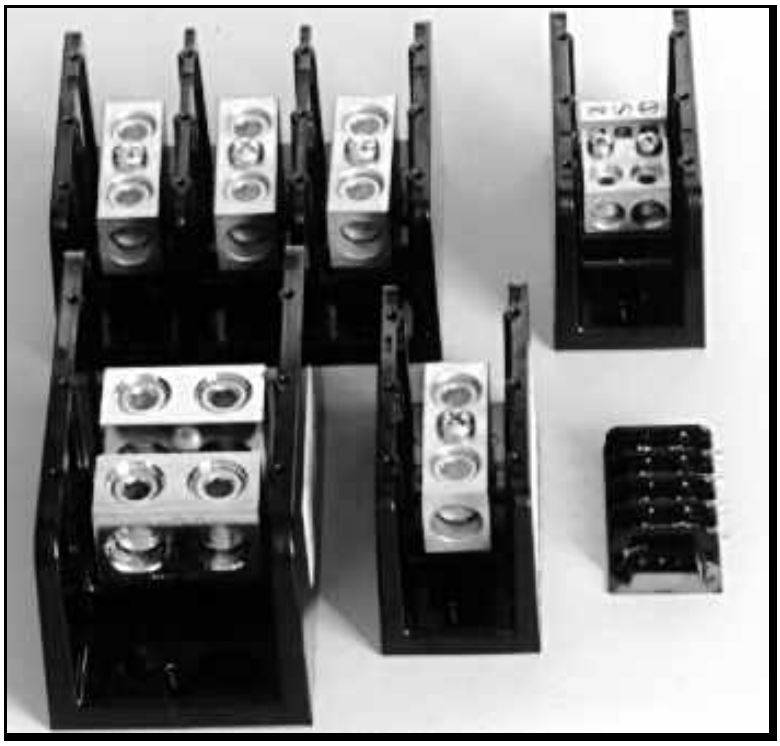

Figure 7. Power Splicing Blocks and Terminal Strips

CONDUCTOR COLOR CODES

The *NEC* established color codes for electrical power systems many years before either the automobile or electronics industries had standardized color codes. PV systems are being installed in an arena covered by the *NEC* and, therefore, **must** comply with *NEC* standards that apply to both ac and dc power systems. In a system where one conductor is grounded, the insulation on all grounded conductors **must** be white or natural gray or be any color except green if marked with white plastic tape or paint at each termination (marking allowed only on conductors larger than 6 AWG). Conductors used for module frame grounding and other exposed metal equipment grounding **must** be bare (no insulation) or have green or green with yellow-striped insulation or identification [200-6, 7; 210-5; 250-119].

The *NEC* requirements specify that the grounded conductor be white. In most PV-powered systems that are grounded, the grounded conductor is the negative conductor. Telephone systems that use positive grounds require special circuits when powered by PV systems that have negative grounds. In a PV system where the array is center tapped, the center tap or neutral **must** be grounded [690-41], and this becomes the white conductor. There is no *NEC* requirement designating the color of the ungrounded conductor, but the convention in power wiring is that the first two ungrounded conductors are colored black and red. This suggests that in two-wire, negative-grounded PV systems, the positive conductor could be red

or any color with a red marking except green or white, and the negative grounded conductor **must** be white. In a three-wire, center-tapped system, the positive conductor could be red, the grounded, center tap conductor **must** be white and the negative conductor could be black.

The *NEC* allows grounded PV array conductors, such as non-white USE or SE that are smaller than 6 AWG, to be marked with a white marker [200-6].

BATTERY CABLES

Battery cables, even though they can be 2/0 AWG and larger, **must** be a standard building-wire type conductor [Chapter 3]. Welding and automobile "battery" cables are not allowed. Flexible, highly-stranded, building-wire type cables (USE/RHW and THW) are available for this use. Flexible cables, identified in Section 400 of the *NEC* are allowed from the battery terminals to a nearby junction box and between battery cells. These cables shall be listed for hard service use and moisture resistance [690-74].

Ground-Fault Protection and Array Disablement

GROUND-FAULTS

Article 690-5 of the *NEC* requires a ground-fault detection, interruption, and array disconnect (GFID) device for fire protection if the PV arrays are mounted on roofs of dwellings. Ground-mounted arrays are not required to have this device. Several devices or inverters are available that meet this requirement. These particular devices may require that the system grounding-electrode conductor be routed through the device. These devices include the following functions:

- Ground-fault detection
- Ground-fault current interruption
- Array disconnect
- Array wiring overcurrent protection

Ground-fault detection, interruption, and array disablement devices might, depending on the particular design, accomplish the following actions automatically:

- Sense ground-fault currents exceeding a specified value
- Interrupt or significantly reduce the fault currents
- Open the circuit between the array and the load
- Indicate the presence of the ground fault

Ground-fault devices have been developed for some grid-tied inverters and stand-alone systems, and others are under development.

PV ARRAY INSTALLATION AND SERVICE

Article 690-18 requires that a mechanism be provided to allow safe installation or servicing of portions of the array or the entire array. The term "disable" has several meanings, and the *NEC* is not clear on what is intended. The *NEC* Handbook does elaborate. Disable can be defined several ways:

- Prevent the PV system from producing any output
- Reduce the output voltage to zero
- Reduce the output current to zero
- Divide the array into non-hazardous segments

The output could be measured at either the PV source terminals or at the load terminals.

Fire fighters are reluctant to fight a fire in a high-voltage battery room because there is no way to turn off a battery bank unless the electrolyte can somehow be removed. In a similar manner, the only way a PV system can have zero output at the array terminals is by preventing light from illuminating the modules. The output voltage may be reduced to zero by shorting the PV module or array terminals. When this is done, short-circuit current will flow through the shorting conductor which, in a properly wired system, does no harm. The output current may be reduced to zero by disconnecting the PV array from the rest of the system. The PV disconnect switch would accomplish this action, but open-circuit voltages would still be present on the array wiring and in the disconnect box. In a large system, 100 amps of short-circuit current (with a shorted array) can be as difficult to handle as an open-circuit voltage of 600 volts.

During PV module installations, the individual PV modules can be covered to disable them. For a system in use, the PV disconnect switch is opened during maintenance, and the array is either short circuited or left open circuited depending on the circumstances. In practical terms, for a large array, some provision (switch or bolted connection) should be made to disconnect portions of the array from other sections for servicing. As individual modules or sets of modules are serviced, they may be covered and/or isolated and shorted to reduce the potential for electrical shock. Aside from measuring short-circuit current, there is little that can be serviced on a module or array when it is shorted. The circuit is usually open circuited for repairs.

Grounding

The subject of grounding is one of the most confusing issues in electrical installations. Definitions from Article 100 of the *NEC* will clarify the situation.

Grounded:	Connected to the earth or to a metallic conductor or surface that serves as earth.
Grounded Conductor: (white or natural gray)	A system conductor that normally carries current and is intentionally grounded. In PV systems, one conductor (normally the negative) of a two-conductor system or the center-tapped wire of a bipolar system is grounded.
Equipment Grounding Conductor: (bare, green, or green with yellow stripe)	A conductor not normally carrying current used to connect the exposed metal portions of equipment to the grounding electrode system or the grounded conductor.
Grounding Electrode Conductor:	A conductor not normally carrying current used to connect the grounded conductor to the grounding electrode or grounding electrode system.

GROUNDING—SYSTEM

For a two-wire PV system over 50 volts (125% of open-circuit PV-output voltage), one dc conductor **shall** be grounded. In a three-wire system, the neutral or center tap of the dc system **shall** be grounded [690-41]. These requirements apply to both stand-alone and grid-tied systems. Such system grounding will enhance personnel safety and minimize the effects of lightning and other induced surges on equipment. Also, the grounding of all PV systems (even 12-volt systems) will reduce radio frequency noise from dc-operated fluorescent lights and inverters.

Size of Grounding Electrode Conductor

The direct-current system-grounding electrode conductor **shall not** be smaller than 6 AWG or the largest conductor supplied by the system [250-166]. If the conductors between the battery and inverter are 4/0 AWG (for example) then the grounding-electrode conductor from the negative conductor (assuming that this is the grounded conductor) to the grounding electrode **must** be 4/0 AWG. The *NEC* allows exceptions to this large grounding conductor requirement. Many PV systems can use a 6 AWG grounding electrode conductor if that is the *only connection* to the grounding electrode [250-166(c)].

Point of Connection

The system grounding electrode conductor for the direct-current portion of a PV system **shall** be connected to the PV-output circuits [690-42] at a single point. When this connection is made close to the modules, added protection from surges is afforded. Disconnect switches **must not** open grounded conductors [690-13]. In stand-alone PV systems, the charge controller may be considered a part of the PV-output circuit, and the point of connecting the grounding electrode conductor could be before or after the charge controller. But this grounding conductor may be a very large conductor (e.g., 4/0 AWG) while the conductors to and from the charge controller may be 10 AWG or smaller. Connecting the 4/0 AWG grounding conductor on the array side of the charge controller, while providing some degree of enhanced surge suppression from lightning induced surges, may not meet the full intent of the grounding requirements. Connecting the grounding conductor to the system on the battery side of the charge controller at a point where the system conductors are the largest size will provide better system grounding at the expense of less lightning protection. Since the *NEC* allows smaller grounding electrode conductors in certain circumstances, either grounding conductor point of connection may be acceptable [250-166]. Figure 8 shows two possible locations for the grounding conductor.

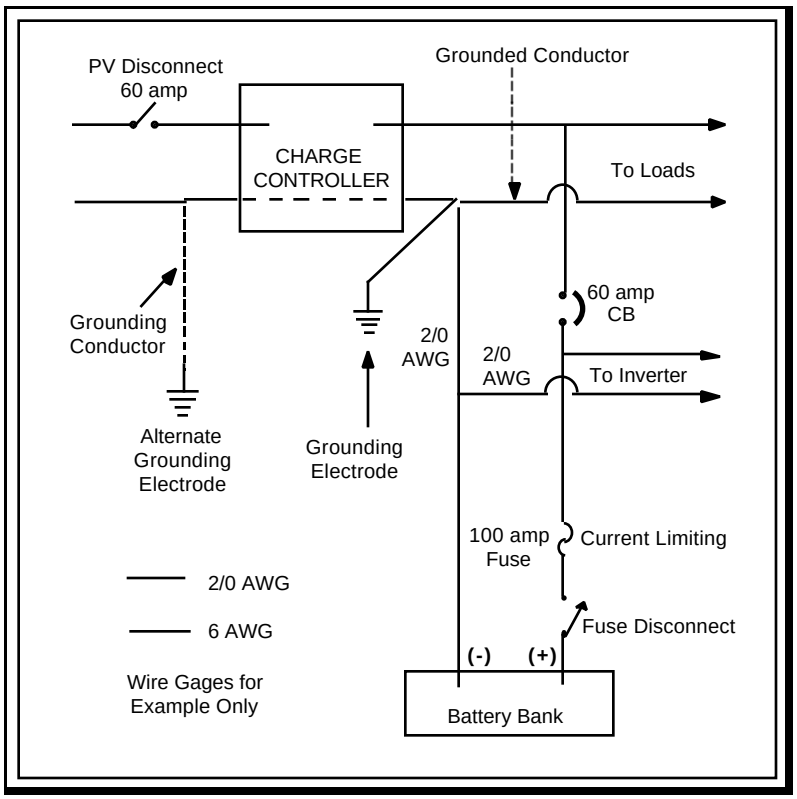

Figure 8. Typical System: Possible Grounding Conductor Locations

The *NEC* does not specifically define where the PV-output circuits end. Circuits from the battery toward the load are definitely load circuits. Since the heaviest conductors are from the battery to the inverter, and either end of these conductors is at the same potential, then either end could be considered a point for connecting the grounding conductor. The negative dc input to the inverter is connected to the metal case in some stand-alone inverter designs, but this is not an appropriate place to connect the grounding electrode conductor and other equipment-grounding conductors, since this circuit is a dc-branch circuit and not a PV-output circuit. Connection of the grounding electrode conductor to or near the negative battery terminal would avoid the "large-wire/small-wire" problem outlined above.

It is imperative that there be no more than one grounding connection to the grounded conductor of a PV system. Failure to limit the connections to one (1) will allow objectionable currents to flow in uninsulated conductors and will create unintentional ground faults in the grounded conductor [250-6]. Future ground-fault protection systems may require that this single grounding connection be made at a specific location. There are exceptions to this rule when PV arrays or generators are some distance from the main loads [250-32].

Unusual Grounding Situations

Some inverter designs use the entire chassis as part of the negative circuit. Also, the same situation exists in certain radios—automobile and shortwave. These designs will not pass the current UL standards for consumer electrical equipment or PV systems and will probably require modification in the future since they do not provide electrical isolation between the exterior metal surfaces and the current-carrying conductors. They also create the very real potential for multiple grounded-conductor connections to ground.

Since the case of these non-listed inverters is connected to the negative conductor and that case **must** be grounded as part of the equipment ground described below, the user has no choice whether or not the system is to be grounded. The system is grounded even if the voltage is less than 50 volts and the point of system ground is the negative input terminal on the inverter. It is strongly suggested that these unlisted inverters not be used and, in fact, to use them or any unlisted component is a violation of the *NEC*.

Some telephone systems ground the positive conductor, and this may cause problems for PV-powered telephone systems with negative grounds. An isolated-ground, dc-to-dc converter may be used to power subsystems

that have different grounding polarities from the main system. In the ac realm, an isolation transformer will serve the same purpose.

In larger utility-tied systems and some stand-alone systems, high impedance grounding systems or other methods that accomplish equivalent system protection and that use equipment listed and identified for the use might be used in lieu of, or in addition to, the required hard ground. The discussion and design of these systems are beyond the scope of this guide. Grounding of grid-tied systems will be discussed in Appendix C.

Charge Controllers—System Grounding

In a grounded system, it is important that the charge controller does not have devices in the grounded conductor. Charge controllers listed to UL *Standard 1741* meet this requirement. Relays or transistors in the grounded conductor create a situation where the grounded conductor is not at ground potential at times when the charge controller is operating. This condition violates provisions of the *NEC* that require all conductors identified as grounded conductors always be at the same potential (i.e. grounded). A shunt in the grounded conductor is equivalent to a wire if properly sized, but the user of such a charge controller runs the risk of having the shunt bypassed when inadvertent grounds occur in the system. The best charge controller design has only a straight-through conductor between the input and output terminals for the grounded current-carrying conductor (usually the negative conductor).

GROUNDING—EQUIPMENT

All noncurrent-carrying exposed metal parts of junction boxes, equipment, and appliances in the entire electrical system **shall** be grounded [690-43; 250 D; 720-1, -10]. All PV systems, regardless of voltage, **must** have an equipment-grounding system for exposed metal surfaces (e.g., module frames and inverter cases) [690-43]. The equipment-grounding conductor **shall** be sized as required by Article 690-45 or 250-122. Generally, this will mean an equipment-grounding conductor size based on the size of the overcurrent device protecting each conductor. Table 250-122 in the *NEC* gives the sizes. For example, if the inverter to battery conductors are protected by a 400-amp fuse or circuit breaker, then at least a 3 AWG conductor **must** be used for the equipment ground for that circuit [Table 250-122]. If the current-carrying conductors have been oversized to lower voltage drop, then the size of the equipment-grounding conductor **must** also be proportionately adjusted [250-122(b)]. In the PV source circuits, if the array can provide short-circuit currents that are less than twice the rating of a particular overcurrent device for the array circuits, then equipment-grounding conductors **must** be used that are sized the same as the array current-carrying conductors

[690-45]. In general, the overcurrent protection is sized at 1.56 Isc, but the available short-circuit currents are much greater from the batteries and other sources. This means that Table 250-122 of the *NEC* usually applies.

INVERTER AC OUTPUTS

The inverter output (120 or 240 volts) **must** be connected to the ac distribution system in a manner that does not create parallel grounding paths. The *NEC* requires that both the green or bare equipment-grounding conductor and the white neutral conductor be grounded. The Code also requires that current not normally flow in the equipment-grounding conductors. If the inverter has ac grounding receptacles as outputs, the grounding and neutral conductors are most likely connected to the chassis and, hence, to chassis ground inside the inverter. This configuration allows plug-in devices to be used safely. However, if the outlets on the inverter are plug and cord connected (not recommended) to an ac load center used as a distribution device, then problems can occur.

The ac load center usually has the neutral and equipment-grounding conductors connected to the same bus bar which is connected to the case where they are grounded. Parallel current paths are created with neutral currents flowing in the equipment-grounding conductors. This problem can be avoided by using a load center with an isolated/insulated neutral bus bar which is separated from the equipment-grounding bus bar.

Inverters with hard-wired outputs may or may not have internal connections. Some inverters with ground-fault circuit interrupters (GFCIs) for outputs **must** be connected in a manner that allows proper functioning of the GFCI. A case-by-case analysis will be required.

BACKUP GENERATORS

Backup generators used for battery charging pose problems similar to using inverters and load centers. These small generators usually have ac outlets which may have the neutral and grounding conductors bonded to the generator frame. When the generator is connected to the system through a load center, to a standby inverter with battery charger, or to an external battery charger, parallel ground paths are likely. These problems need to be addressed on a case-by-case basis. A PV system, in any operating mode (inverting or battery charging), **must not** have currents in the equipment-grounding conductors [250-6].

SUGGESTED AC GROUNDING

Auxiliary ac generators and inverters should be hard-wired to the ac-load center. Neither should have an internal bond between the neutral and grounding conductors. Neither should have any receptacle outlets that can be used when the

generator or inverter is operated when disconnected from the load center. The single bond between the neutral and ground will be made in the load center. If receptacle outlets are desired on the generator or the inverter, they should be ground-fault-circuit-interrupting devices (GFCI).

Section 250-32 of the *NEC* presents alternate methods of achieving a safe grounding system.

GROUNDING ELECTRODE

The dc system grounding electrode **shall** be common with, or bonded to, the ac-grounding electrode (if any) [690-47, 250-C]. The system-grounding conductor and the equipment-grounding conductor **shall** be tied to the same grounding electrode or grounding electrode system. Even if the PV system is ungrounded (optional at less than 50 volts [typically 125% of Voc]), equipment-grounding conductors **must** be used and **must** be connected to a grounding electrode [250-110]. Metal water pipes and other metallic structures as well as concrete encased electrodes are to be used in some circumstances [250-50]. When a grounding electrode is used, it **shall** be a corrosion resistant rod, a minimum of 5/8 inch (16mm) in diameter (1/2" (13mm) if stainless steel)) with at least 8 feet (2.4m) driven into the soil at an angle no greater than 45 degrees from the vertical [250-52]. Listed connectors **must** be used to connect the grounding conductor to the ground rod.

A bare-metal well casing makes a good grounding electrode. It should be part of a grounding electrode system. The central pipe to the well should not be used for grounding, because it is sometimes removed for servicing.

For maximum protection against lightning-induced surges, it is suggested that a grounding electrode **system** be used with at least two grounding electrodes bonded together. One electrode would be the main system grounding electrode as described above. The other would be a supplemental grounding electrode located as close to the PV array as practical. The module frames and array frames would be connected directly to this grounding electrode to provide as short a path as possible for lightning-induced surges to reach the earth. This electrode is usually bonded with a conductor to the main system grounding electrode [250-54]. The size of the bonding or jumper cable **must** be related to the ampacity of the overcurrent device protecting the PV source circuits. This bonding jumper is an auxiliary to the module frame grounding that is required to be grounded with an equipment-grounding conductor. *NEC* Table 250-122 gives the requirements. Equipment-grounding conductors are allowed to be smaller than circuit conductors when the circuit conductors become very large. Article 250 of the *NEC* elaborates on these requirements.

Do not connect the negative current-carrying conductor to the grounding electrode, to the equipment-grounding conductor, or to the frame at the modules. There should be one and only one point in the system where the grounding electrode conductor is attached to the system-grounded conductor. See Figure 9 for clarification. The wire sizes shown are for illustration only and will vary depending on system size. Chapter 3 of the *NEC* specifies the ampacity of various types and sizes of conductors. As is common throughout the *NEC*, there are exceptions to this guidance. See *NEC* Section 250-32b.

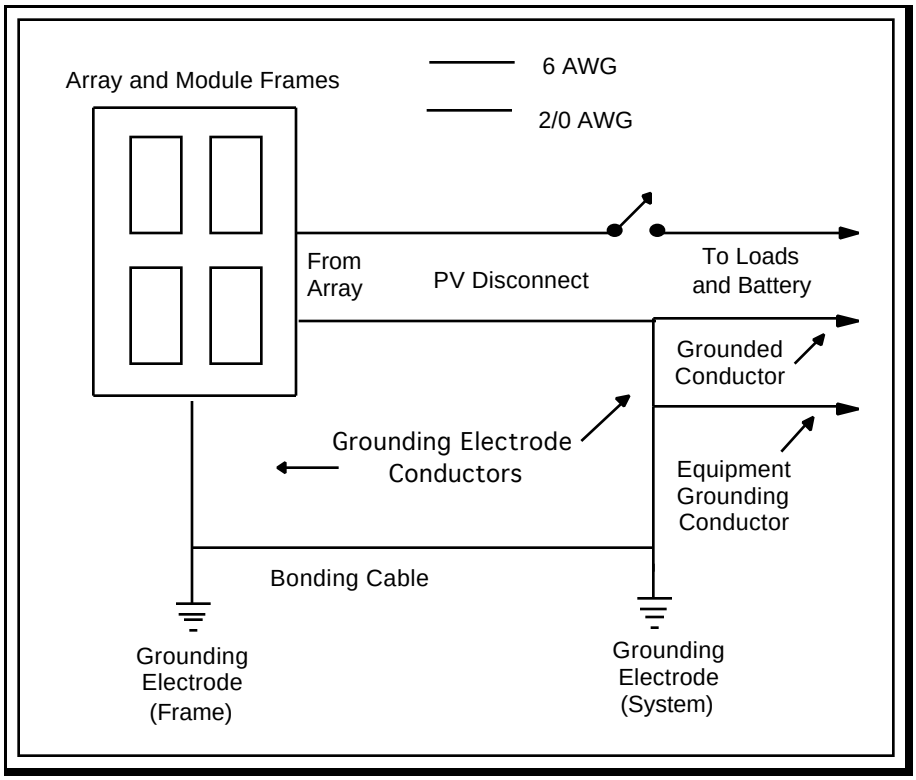

Figure 9. Example Grounding Electrode System

Conductor Ampacity

NEC Tables 310-16 and 310-17 give the ampacity (current-carrying capacity in amps) of various sized conductors at temperatures of 30°C (86°F). There are many adjustments that **must** be made to these numbers before a conductor size can be selected.

The installation method **must** be considered. Are the conductors in free air [Table 310-17] or are they bundled together or placed in conduit [Table 310-16]?

What is the ambient air temperature, if not 30°C (86°F)?

How many current-carrying conductors are grouped together?

These adjustments are made using factors presented in Chapter 3 of the *NEC*.

Additionally, most conductors used in electrical power systems are restricted from operating on a continuous basis at more than 80% of their rated ampacity [210-19, 215-2]. This 80% factor also applies to overcurrent devices and switchgear unless listed for operation at 100% of rating [210-20]. PV conductors are also restricted by this factor (0.8) [690-8(b)].

Conductors carrying PV module currents are further restricted by an additional derating factor of 80% because of the manner in which PV modules generate electrical energy in response to sunlight [690-8(a)].

It should be noted that these various ampacity adjustment factors may be applied to the basic conductor ampacities (e.g. multiply them by 0.80) or they may be applied to the anticipated current in the circuit (e.g. multiply the current by 1.25, the reciprocal of 0.8).

Photovoltaic modules are limited in their ability to deliver current. The short-circuit current capability of a module is nominally 10 to 15% higher than the operating current. Normal, daily values of solar irradiance may exceed the standard test condition of 1000W/m^2. These increased currents are considered by using the 1.25 adjustment in the ampacity calculations. Another problem for PV systems is that the conductors may operate at temperatures as high as 65-75°C when the modules are mounted close to a structure, there are no winds, and the ambient temperatures are high. Temperatures in module junction boxes frequently occur within this range. This will require that the ampacity of the conductors be derated or corrected with factors given in *NEC* Table 310-16 or 310-17. For example, a 10 AWG USE-2/RHW-2 single-conductor cable used for module interconnections in conduit has a 90°C insulation and an ampacity of 40 amps in an ambient temperature of 26-30°C. When it is used in ambient temperatures of 61-70°C, the ampacity of this cable is reduced to 23.2 amps.

It should be noted that the ampacity values associated with conductors having 90°C insulation can only be used if the terminals of the module and connected overcurrent devices are rated at 90°C [110-14(c)]. If the terminals are rated at only 75°C, then the ampacity values associated with 75°C insulation **must** be used, even when conductors with 90°C insulation are being used. Of course, if the 90°C insulation wire is used, the temperature derating may start with the 90°C ampacity values.

The ampacity of conductors in PV source circuits **shall** be at least 125% of the rated module or parallel-connected modules <u>short-circuit current</u> [690-8]. The ampacity of the PV-output circuit conductors **shall** be at least 125% of the short-circuit output current [690-8a]. The ampacity of conductors to and from an inverter or power conditioning system **shall** be 125% of the rated operating current for that device [690-8a]. In a similar manner, other conductors in the system should have an ampacity of 125% of the rated operating current to allow for long duration operation at full power [215-2]. These *NEC* requirements are to ensure that the connected overcurrent devices or panelboards operate at no more than 80% of their ampacity. Operation when snow or cloud enhancement increases the PV output above normal may require additional ampacity. Daily expected values of solar irradiance will exceed the standard test condition of 1000W/m^2 at many locations.

A 1989 revision to the UL *Standard 1703* for PV modules requires that module installation instructions include an additional 25% of the 25°C ratings for short-circuit current and open-circuit voltage to allow for expected daily peak irradiance and colder temperatures. This 1.25 factor, while still in UL *Standard 1703*, is also now contained in Section 690-8(a) of the *NEC* as mentioned above. There are only two 1.25 factors applied to PV module currents and the combined factor is 1.56 (1.25x1.25). Correct design practices require correctly determining wire size and the rating of overcurrent devices on PV source and output circuits. However, the rating of the overcurrent device should always be less than, or equal to, the ampacity of the cable. The *NEC* makes only infrequent exceptions to this rule. [240-3].

The ampacity of conductors and the sizing of overcurrent devices is an area that demands careful attention by the PV system designer/installer. Temperatures and wiring methods **must** be addressed for each site. Start with the 125% of Isc value to comply with the UL requirements [now in Section 690-8(a)]. Then use an additional 125% for code compliance. Finally, derate the cable ampacity for temperature. See Appendix E for additional examples.
Overcurrent devices may have terminals rated for connection to 60°C conductors necessitating a reduction in the cable ampacity when using 75°C or 90°C conductors.

When the battery bank is tapped to provide multiple voltages (i.e., 12 and 24 volts from a 24-volt battery bank), the common negative conductor will carry the *sum* of all of the simultaneous load currents. The negative conductor **must** have an *ampacity at least equal to the sum* of all the amp ratings of the overcurrent devices protecting the positive conductors or have an ampacity equal to the sum of the ampacities of the positive conductors [690-8(c)].

The *NEC* does not allow paralleling conductors for added ampacity, except that cables 1/0 AWG or larger may be paralleled under certain conditions [310-4]. DC-rated switchgear, overcurrent devices, and conductors cost significantly more when rated to carry more than 100 amps. It is suggested that large PV arrays be broken down into subarrays, each having a short-circuit output of less than 64 amps. This will allow use of 100-amp-rated equipment (156% of 64 amps) on each source circuit.

STAND-ALONE SYSTEMS—INVERTERS

In stand-alone systems, inverters are used to change the direct current (dc) from a battery bank to 120-volt or 240-volt, 60-Hertz (Hz) alternating current (ac). The conductors between the inverter and the battery **must** have properly rated overcurrent protection and disconnect mechanisms [240, 690-8, 690-9]. These inverters frequently have short-duration (seconds) surge capabilities that are four to six times the rated output. For example, a 2,500-watt inverter might be required to surge to 10,000 volt-amps for 5 seconds when a motor load must be started. The *NEC* requires the ampacity of the conductors between the battery and the inverter to be sized by the rated 2,500-watt continuous output of the inverter. For example, in a 24-volt system, a 2,500-watt inverter would draw 134 amps at full load (85% efficiency at 22 volts) and 420 amps for motor-starting surges. The ampacity of the conductors between the battery **must** be 125% of the 134 amps or 167 amps.

To minimize steady-state voltage drops, account for surge-induced voltage drops, and to increase system efficiency, some well-designed systems have conductors that are larger than required by the *NEC*. When the current-carrying conductors are oversized, the equipment-grounding conductor **must** also be oversized proportionately [250-122].

See Appendix F for additional considerations on conductor ampacity.

Overcurrent Protection

The *NEC* requires that every ungrounded conductor be protected by an overcurrent device [240-20]. In a PV system with multiple sources of power (PV modules, batteries, battery chargers, generators, power conditioning systems, etc.), the overcurrent device **must** protect the conductor from overcurrent from any source connected to that conductor [690-9]. Blocking diodes, charge controllers, and inverters are not considered as overcurrent devices and **must** be considered as zero-resistance wires when assessing overcurrent sources [690-9 FPN]. If the PV system is directly connected to the load without battery storage or other source of power, then no overcurrent protection is required if the conductors are sized at 156% of the short-circuit current [690-8b-Ex].

When circuits are opened in dc systems, arcs are sustained much longer than they are in ac systems. This presents additional burdens on overcurrent-protection devices rated for dc operation. Such devices **must** carry the rated load current and sense overcurrent situations as well as be able to safely interrupt dc currents. AC overcurrent devices have the same requirements, but the interrupt function is considerably easier.

AMPERE RATING

The PV source circuits **shall** have overcurrent devices rated at least 156% (1.25 x 1.25) of the parallel module short-circuit current. The PV-output circuit overcurrent devices **shall** be rated at least 156% of the short-circuit PV currents [690-8]. Time-delay fuses or circuit breakers would minimize nuisance tripping or blowing. In all cases, dc-rated devices having the appropriate dc-voltage rating **must** be used.

All ungrounded conductors from the PV array **shall** be protected with overcurrent devices [Article 240, Diagram 690-1]. Grounded conductors (not shown in Diagram 690-1) **must not** have overcurrent devices since the independent opening of such a device might unground the system. Since PV module outputs are current limited, these overcurrent devices are actually protecting the array wiring from backfeed from parallel-connected modules, the battery, or the inverter.

Because the conductors and overcurrent devices are sized to deal with 156% of the short-circuit current for that particular PV circuit, overcurrents from those modules or PV sources, which are limited to the short-circuit current, cannot trip the overcurrent device in this circuit. The overcurrent devices in these circuits protect the conductors from overcurrents from parallel connected sets of modules or overcurrents from the battery bank. In stand-alone systems or grid-connected systems, these array overcurrent devices protect the array wiring from overcurrents from parallel strings of modules, the battery, or from the generator or ac utility power.

Often, PV modules or series strings of modules are connected in parallel. As the conductor size used in the array wiring increases to accommodate the higher short-circuit currents of paralleled modules, each conductor size **must** be protected by an appropriately sized overcurrent device. These devices **must** be placed nearest all sources of potential overcurrent for that conductor [240-21]. Figure 10 shows an example of array conductor overcurrent protection for a medium-size array broken into subarrays. The cable sizes and types shown are examples only. The actual sizes will depend on the ampacity needed.

Either fuses or circuit breakers are acceptable for overcurrent devices provided they are rated for their intended uses—i.e., they have dc ratings when used in dc circuits, the ampacity is correct, and they can interrupt the necessary currents when short circuits occur [240 E, F, G]. Figure 11 shows dc-rated, UL-Listed circuit breakers being used in a PV power center for overcurrent protection and disconnects. The circuit breakers in this system are manufactured by Heinemann (Appendix A). The *NEC* allows the use of listed (recognized) supplemental overcurrent devices only for PV source circuit protection.

Some overcurrent devices rated at less than 100 amps may have terminals that are rated for use with 60°C conductors. The ampacity calculations of the connected cables may have to be adjusted.

TESTING AND APPROVAL

The *NEC* requires that listed devices be used for overcurrent protection. A listed device by UL or other approved testing laboratory is tested against an appropriate UL standard. A recognized device is tested by UL or other approved testing laboratory to standards established by the device manufacturer. In most cases, the standards established by the manufacturer are less rigorous than those established by UL. Few inspectors will accept recognized devices, particularly where they are required for overcurrent protection. Recognized devices are generally intended for use in a factory assembly or equipment that will be listed in its entirety.

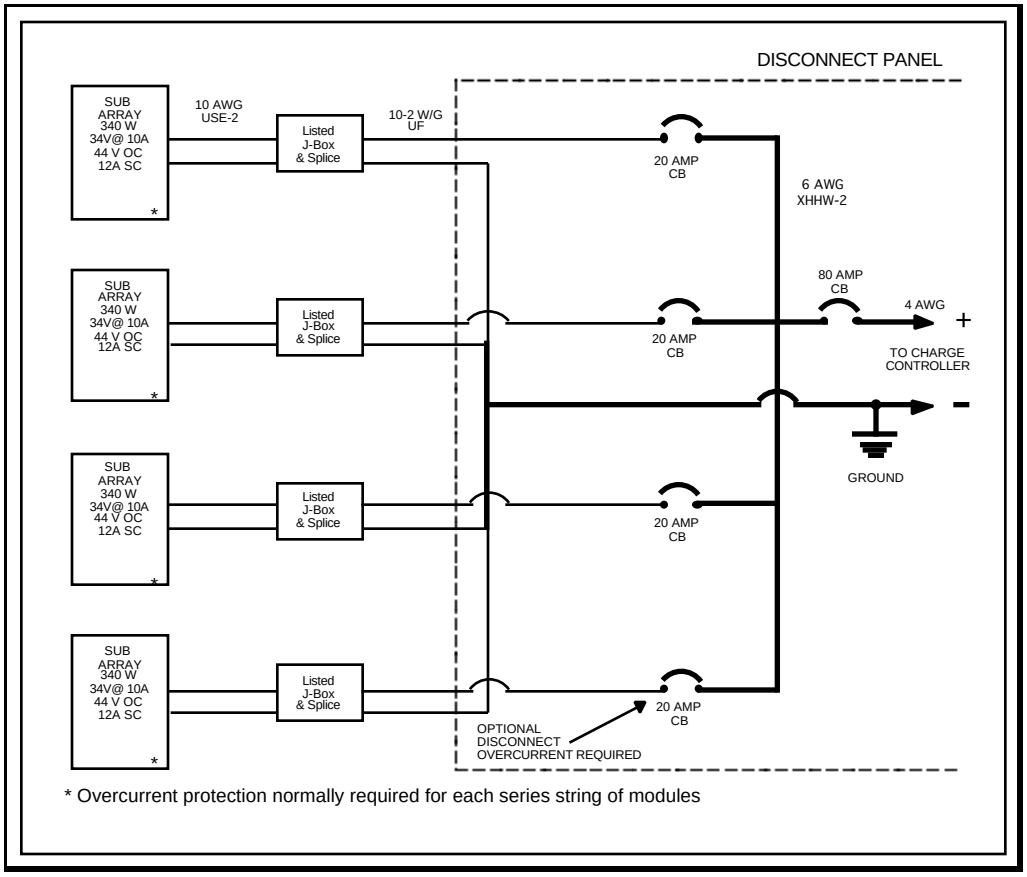

Figure 10. Typical Array Conductor Overcurrent Protection (with Optional Subarray Disconnects)

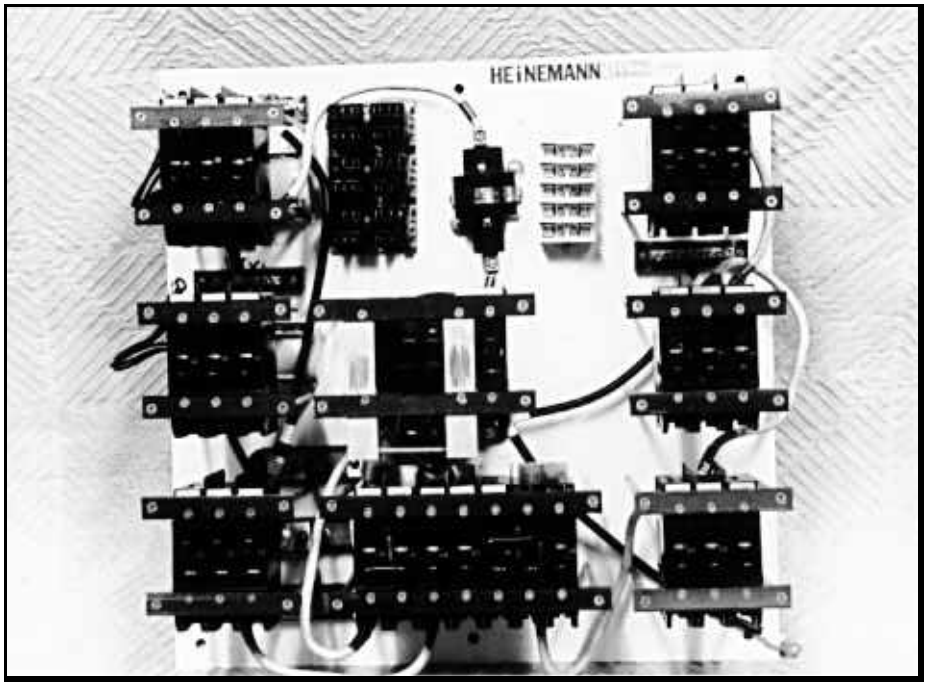

Figure 11. Listed Branch-Circuit Rated Breakers

Since PV systems may have transients—lightning and motor starting as well as others—inverse-time circuit breakers (the standard type) or time-delay fuses should be used in most cases. In circuits where no transients are anticipated, fast-acting fuses can be used. They should be used if relays and other switchgear in dc systems are to be protected. Time-delay fuses that can also respond very quickly to short-circuit currents may also be used for system protection.

BRANCH CIRCUITS

DC branch circuits in stand-alone systems start at the battery and go to the receptacles supplying the dc loads or to the dc loads that are hard wired, such as inverters. In direct-connected systems (no battery), the PV output circuits go to the power controller or master power switch and a branch circuit goes from this location to the load. In utility-intertie systems, the circuit between the inverter and the ac-load center may be considered a feeder circuit.

Fuses used to protect dc or ac branch (load) and feeder circuits **must** be listed for that use. They **must** also be of different sizes and markings for each amperage and voltage group to prevent unintentional interchange [240F]. These particular requirements eliminate the use of glass fuses and plastic automotive fuses as branch-circuit overcurrent devices because they are neither tested nor rated for this application. DC-rated fuses that meet the requirements of the *NEC* are becoming more prevalent. Figure 12 shows listed, dc-rated, time-delay fuses on the left that are acceptable for branch circuit use, which would include the battery fuse. Acceptable dc-rated, listed fast-acting supplementary fuses are shown on the right and can be used in the PV source circuits. The fuses shown are made by Littelfuse (Appendix A) and others, and the fuse holders are made by Marathon (Appendix A). Other manufacturers, such as Bussman and Ferraz, also have listed dc ratings on the types of fuses that are needed in PV systems.

Figure 12. Listed Branch Circuit and Supplemental Fuses

Automotive fuses have no dc rating by the fuse industry or the testing laboratories and **should not be used in PV systems**. When rated by the manufacturer, they have only a 32-volt maximum rating, which is less than the open-circuit voltage from a 24-volt PV array. Furthermore, these fuses have no rating for interrupt current, nor are they generally marked with all of the information required for branch-circuit fuses. They are not considered supplemental fuses under the UL listing or component recognition programs. Figure 13 shows unacceptable automotive fuses on the left and listed ac supplemental fuses on the right. Unfortunately, even the supplemental fuses are intended for ac use and frequently have no dc ratings.

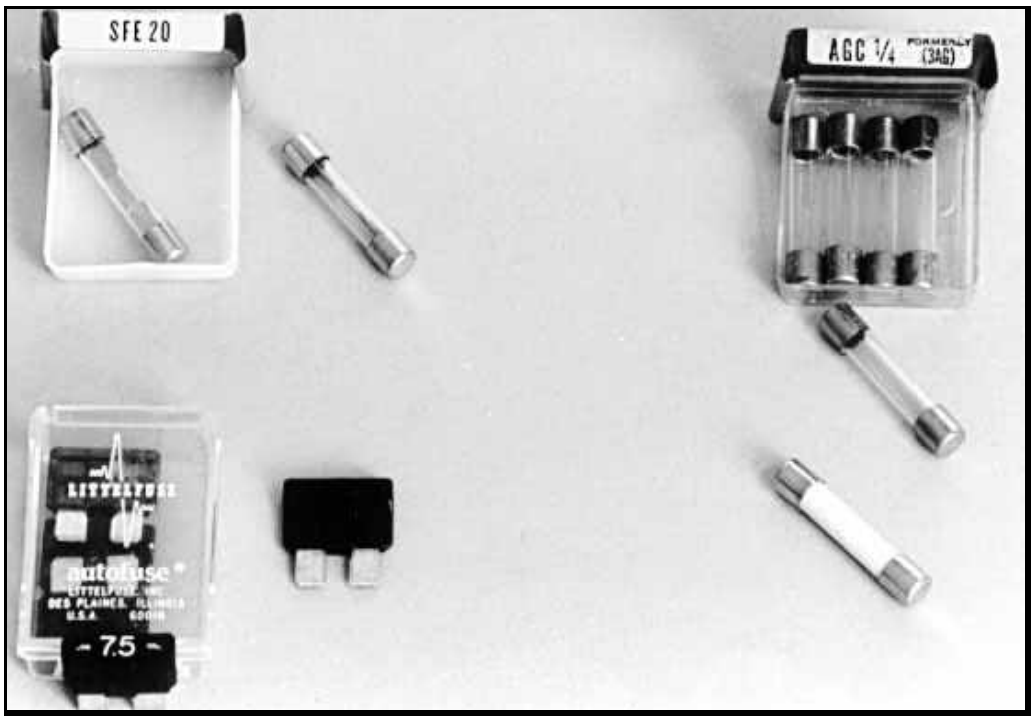

Figure 13. Unacceptable Fuses (left) and Acceptable Fuses (right) when DC-rated

Circuit breakers also have specific requirements when used in branch circuits, but they are generally available with the needed dc ratings [240 G]. Figure 14 shows examples of dc-rated, UL-Recognized circuit breakers (supplemental) on the left. When listed, they may be used in the PV source circuits for disconnects and overcurrent protection, but most are only recognized devices and may not be allowed by the inspector. The larger units are dc-rated, listed branch-circuit rated circuit breakers that can be used in dc-load centers for branch-circuit protection. The breakers shown are produced by Square D and Heinemann. Airpax also produces dc listed circuit breakers, and Potter Brumfield and others produce dc-rated, UL-Recognized, supplemental breakers.

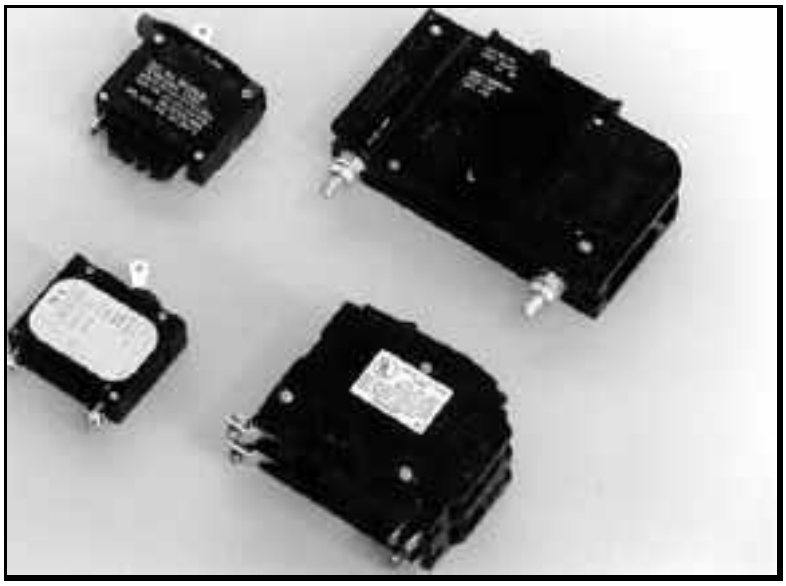

Figure 14. UL-Recognized and Listed Circuit Breakers

To provide maximum protection and performance (lowest voltage drop) on branch circuits (particularly on 12 and 24-volt systems), the ampacity of the conductors might be increased, but the rating of the overcurrent devices protecting that cable should be as low as possible consistent with load currents. A general formula for cable ampacity and overcurrent device rating is 100% of the noncontinuous loads and 125% of the continuous loads anticipated [215-2].

AMPERES INTERRUPTING RATING (AIR)—SHORT-CIRCUIT CONDITIONS

Overcurrent devices—both fuses and circuit breakers—**must** be able to safely open circuits with short-circuit currents flowing in them. Since PV arrays are inherently current limited, high short-circuit currents from the PV array are normally not a problem when the conductors are sized as outlined above. In stand-alone systems with storage batteries, however, the short-circuit condition is very severe. A single 220 amp-hour, 6-volt, deep-discharge, lead-acid battery may produce short-circuit currents as high as 8,000 amps for a fraction of a second and as much as 6,000 amps for a few seconds in a direct terminal-to-terminal short circuit. Such high currents can generate excessive thermal and magnetic forces that can cause an underrated overcurrent device to burn or blow apart. Two paralleled batteries could generate nearly twice as much current, and larger capacity batteries would be able to deliver proportionately more current under a short-circuit condition. In dc systems, particularly stand-alone systems with batteries, the interrupt capability of every overcurrent device is important. This interrupt capability is specified as Amperes Interrupting Rating (AIR) and sometimes Amperes Interrupting Capability (AIC).

Most dc-rated, listed, branch circuit breakers that can be used in PV systems have an AIR of 5,000 amps. However, Heinemann Electric and AirPax make numerous circuit breakers with AIRs of 25,000 amps (Appendix A). Some dc-rated, UL-Recognized supplemental circuit breakers have an AIR of only 3,000 amps. Listed, dc-rated class-type fuses normally have an AIR of up to 20,000 amps if they are of the current-limiting variety.

Fuses or circuit breakers **shall never be** paralleled or ganged to increase current-carrying capability unless done so by the factory and listed for such use [240-8].

FUSING OF PV SOURCE CIRCUITS

The *NEC* allows supplementary fuses to be used in PV source circuits [690-9(c)]. A supplementary fuse is one that is designed for use inside a piece of listed equipment. These fuses supplement the main branch-circuit fuse and do not have to comply with all of the requirements of branch fuses. They **shall**, however, be dc rated, listed, and able to handle the short-circuit currents they may be subjected to [690-9d]. Unfortunately, many supplemental fuses are not dc rated, and if they are, the AIR (when available) is usually less than 5,000 amps. The use of ac-only-rated supplementary fuses **is not** recommended for the dc circuits of PV systems [110-3(b)].

CURRENT-LIMITING FUSES—STAND-ALONE SYSTEMS

A current-limiting fuse **must** be used in each ungrounded conductor from the battery to limit the current that a battery bank can supply to a short-circuit and to reduce the short-circuit currents to levels that are within the capabilities of downstream equipment [690-71(c)]. These fuses are available with UL ratings of 125, 300, and 600 volts dc, currents of 0.1 to 600 amps, and a dc AIR of 20,000 amps. They are classified as RK5 or RK1 current-limiting fuses and should be mounted in Class-R rejecting fuse holders or dc-rated, fused disconnects. Class J or T fuses with dc ratings might also be used. For reasons mentioned previously, time-delay fuses should be specified, although some designers are getting good results with Class T fast-acting fuses. One of these fuses and the associated disconnect switch should be used in **each** bank of batteries with a paralleled amp-hour capacity up to 1,000 amp-hours. Batteries with single cell amp-hour capacities higher than 1,000 amp-hours will require special design considerations, because these batteries may be able to generate short-circuit currents in excess of the 20,000 AIR rating of the current-limiting fuses. When calculating short-circuit currents, the resistances of all connections, terminals, wire, fuse holders, circuit breakers, and switches **must** be considered. These resistances serve to reduce the magnitude of the available short-circuit currents at any particular point. The suggestion of one fuse per 1,000 amp-hours of battery size is only a general estimate, and the calculations are site specific. The listed branch-circuit fuses shown in Figure 12 are current limiting.

For systems less than 65 volts (open circuit), Heinemann Electric 25,000 AIR circuit breakers may be used (Appendix A). These circuit breakers are not current limiting, even with the high interrupt rating, so they cannot be used to protect other types of fuses or circuit breakers. An appropriate use would be in the conductor between the battery bank and the inverter. This single device would minimize voltage drop and provide the necessary disconnect and overcurrent features. When high AIC circuit breakers are used throughout a PV system,. there may be *NO* requirement for a current-limiting fuse.

The equipment and conductors **must** be braced for the available short-circuit current, or current-limiting devices **must** be used.

CURRENT-LIMITING FUSES—GRID-CONNECTED SYSTEMS

Normal electrical installation practice requires that utility service entrance equipment have fault-current protection devices that can interrupt the available short-circuit currents [110-9]. This requirement applies to the utility side of any power conditioning system in a PV installation. If the service is capable of delivering fault currents in excess of the AIR rating of the overcurrent devices used to connect the inverter to the system, then current-limiting overcurrent devices **must** be used [110-9].

The equipment and conductors **must** be braced for the available short-circuit current, or current-limiting devices **must** be used.

FUSE SERVICING

Whenever a fuse is used as an overcurrent device and is accessible to unqualified persons, it **must** be installed in such a manner that all power can be removed from both ends of the fuse for servicing. It is not sufficient to reduce the current to zero before changing the fuse. There **must** be no voltage present on either end of the fuse prior to service. This may require the addition of switches on both sides of the fuse location—a complication that increases the voltage drop and reduces the reliability of the system [690-16]. Because of this requirement, the use of a fusible pullout-style disconnect or circuit breaker is recommended. For the charging and dc-load circuits, it is recommended that a current-limiting fuse be used at the battery with a switch located between the battery and the current-limiting fuse. Circuit breakers can then be used for all other overcurrent devices in circuits toward the PV module where the available fault currents do not exceed their AIR or where they are protected by the current-limiting fuse.

Ungrounded 12 or 24-volt systems require an overcurrent device in both of the ungrounded conductors of each circuit. Since an equipment-grounding system is

required on all systems, costs may be reduced by grounding the system and using overcurrent devices only in the remaining ungrounded conductors.

Disconnecting Means

There are many considerations in configuring the disconnect switches for a PV system. The *National Electrical Code* deals with safety first and other requirements last—if at all. The PV designer should also consider equipment damage from over voltage, performance options, equipment limitations, and cost.

A photovoltaic system is a power generation system, and a specific minimum number of disconnects are necessary to deal with that power. Untrained personnel will be operating the systems; therefore, the disconnect system **must** be designed to provide safe, reliable, and understandable operation.

Disconnects may range from nonexistent in a self-contained PV-powered light for a sidewalk to those found in the space-shuttle-like control room in a large, multi-megawatt, utility-tied PV power station. Generally, local inspectors will not require disconnects on totally enclosed, self-contained PV systems like a PV-powered, solar, hot-water circulating system. This would be particularly true if the entire assembly were listed as a unit and there were no external contacts or user serviceable parts. However, the situation changes as the complexity of the device increases and separate modules, batteries, and charge controllers having external contacts are wired together and possibly operated and serviced by unqualified personnel.

PHOTOVOLTAIC ARRAY DISCONNECTS

Article 690 requires all current-carrying conductors from the PV power source or other power source to have disconnect provisions. This includes the grounded conductor, if any [690-C]. Ungrounded conductors **must** have a switch or circuit breaker disconnect [690-13, -15, -17]. Grounded conductors which normally remain connected at all times may have a bolted disconnect (terminal or lug) that can be used for service operations and for meeting the *NEC* requirements. Grounded conductors of faulted source circuits in roof-mounted dc PV arrays on dwellings are allowed to be automatically interrupted as part of ground-fault protection requirements in 690-5.

In an ungrounded 12- or 24-volt PV system, both positive and negative conductors **must** be switched, since both are ungrounded. Since all systems **must** have an equipment-grounding system, costs may be reduced and performance improved by grounding 12- or 24-volt systems and using one-pole disconnects on the remaining ungrounded conductor.

EQUIPMENT DISCONNECTS

Each piece of equipment in the PV system **shall** have disconnect switches to disconnect it from all sources of power. The disconnects **shall** be circuit breakers or switches and **shall** comply with all of the provisions of Section 690-17. DC-rated switches are expensive; therefore, the ready availability of moderately priced dc-rated circuit breakers with ratings up to 125 volts and 110 amps would seem to encourage their use in all 12-, 24-, and 48-volt systems. When properly located and used within their approved ratings, circuit breakers can serve as both the disconnect and overcurrent device. In simple systems, one switch or circuit breaker disconnecting the PV array and another disconnecting the battery may be all that is required.

A 2,000-watt inverter on a 12-volt system can draw more than 235 amps at full load. Disconnect switches **must** be rated to carry this load and have appropriate interrupt ratings. Again, a dc-rated, listed circuit breaker may prove less costly and more compact than a switch and fuse with the same ratings.

BATTERY DISCONNECT

When the battery is disconnected from the stand-alone system, either manually or through the action of a fuse or circuit breaker, care should be taken that the PV system not be allowed to remain connected to the load. Small loads will allow the PV array voltage to increase from the normal battery charging levels to the open-circuit voltage, which will shorten lamp life and possibly damage electronic components.

This potential problem can be avoided by using ganged multipole circuit breakers or ganged fused disconnects as shown in Figure 15. This figure shows two ways of making the connection. Separate circuits, including disconnects and fuses between the charge controller and the battery and the battery and the load, as shown in Figure 16, may be used if it is desired to operate the loads without the PV array being connected. If the design requires that the entire system be shut down with a minimum number of switch actions, the switches and circuit breakers could be ganged multipole units.

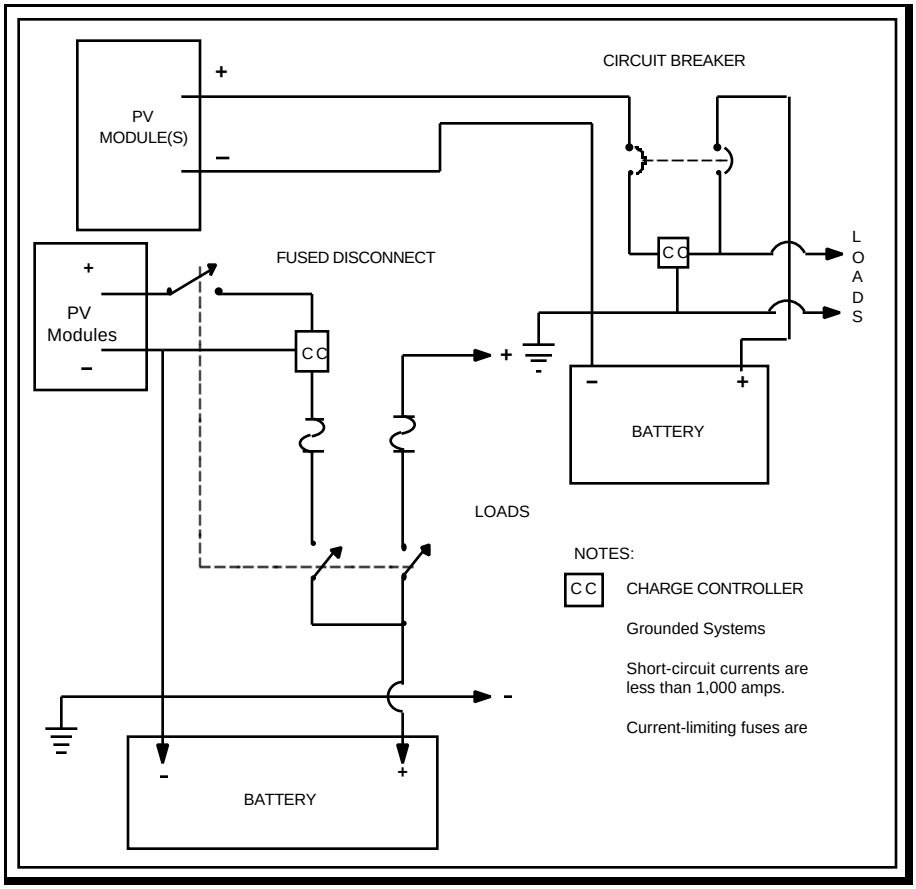

Figure 15. Small System Disconnects

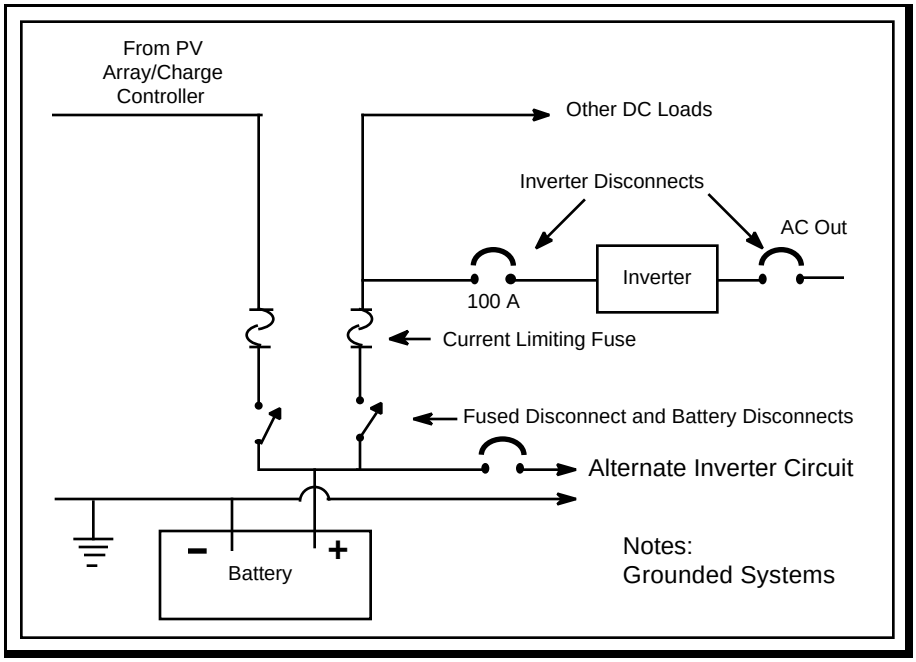

Figure 16. Separate Battery Disconnects

CHARGE CONTROLLER DISCONNECTS

Some charge controllers are fussy about the sequence in which they are connected and disconnected from the system. Most charge controllers do not respond well to being connected to the PV array and not being connected to the battery. The sensed battery voltage (or lack thereof) would tend to rapidly cycle between the array open-circuit voltage and zero as the controller tried to regulate the nonexistent charge process. This problem will be particularly acute in self-contained charge controllers with no external battery sensing. The use of charge controllers listed to UL *Standard 1741* will minimize this problem.

Again, the multipole switch or circuit breaker can be used to disconnect not only the battery from the charge controller, but the charge controller from the array. Probably the safest method for self-contained charge controllers is to have the PV disconnect switch disconnect both the input and the output of the charge controller from the system. Larger systems with separate charge control electronics and switching elements will require a case-by-case analysis—at least until the controller manufacturers standardize their products. Figure 17 shows two methods of disconnecting the charge controller.

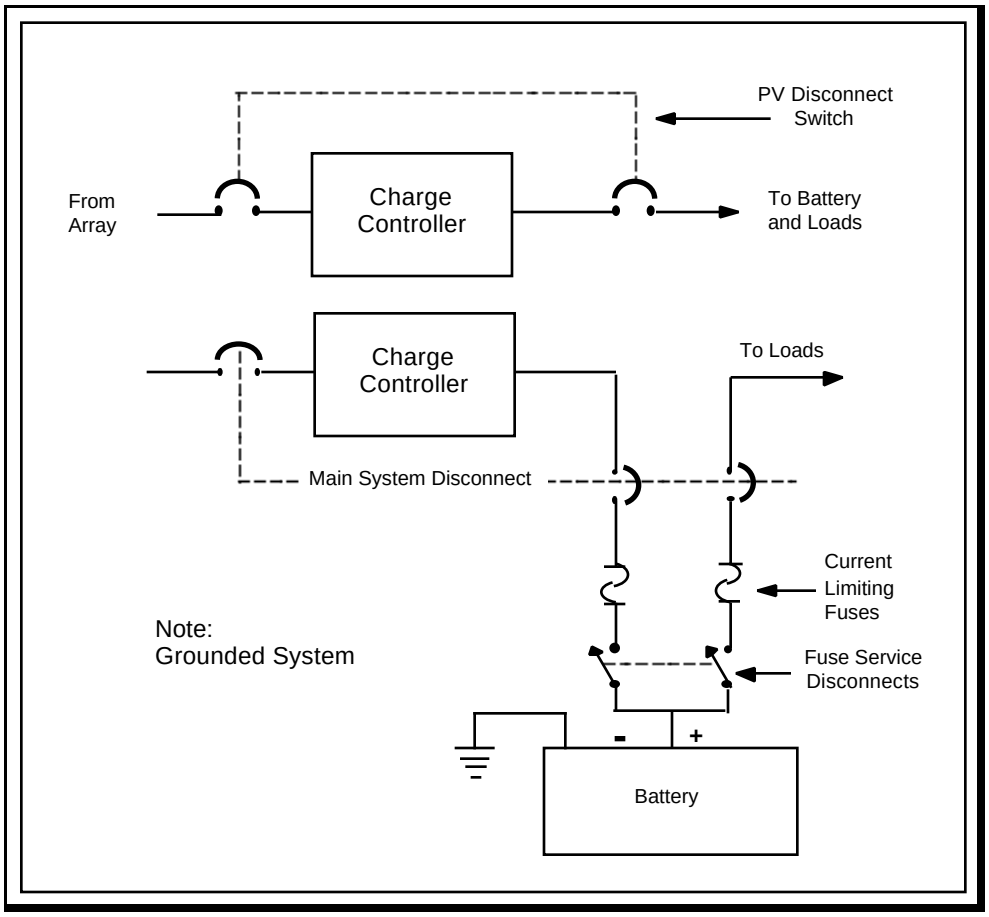

Figure 17. Charge Controller Disconnects

NON-GROUNDED SYSTEMS

Systems that do not have one of the current-carrying conductors grounded **must** have disconnects and overcurrent devices in all of the ungrounded conductors. This means two-pole devices for the PV, battery, and inverter disconnects and overcurrent devices. The additional cost is considerable.

MULTIPLE POWER SOURCES

When multiple sources of power are involved, the disconnect switches **shall** be grouped and identified [230-72, 690-13]. No more than six motions of the hand will be required to operate all of the disconnect switches required to remove all power from the system [230-71]. These power sources include PV output, the battery system, any generator, and any other source of power. Multipole disconnects or handle ties should be used to keep the number of motions of the hand to six or fewer.

Panelboards, Enclosures, and Boxes

Disconnect and overcurrent devices **shall** be mounted in listed enclosures, panelboards, or boxes [240-30]. Wiring between these enclosures **must** use a *NEC* -approved method [110-8]. Appropriate cable clamps, strain-relief methods, or conduit **shall** be used. All openings not used **shall** be closed with the same or similar material to that of the enclosure [370-18]. Metal enclosures **must** be bonded to the equipment-grounding conductor [370-4]. The use of wood or other combustible materials is discouraged. Conductors from different systems such as utility power, gas generator, hydro, or wind **shall not** be placed in the same enclosure, box, conduit, etc., as PV source conductors unless the enclosure is partitioned [690-4b]. This requirement stems from the need to keep "always live" PV source conductors separate from those that can be turned off.

When designing a PV distribution system or panel board, a listed NEMA type box and listed disconnect devices and overcurrent devices should be used. The requirements for the internal configuration of these devices are established by *NEC* Articles 370, 373, and 384 and **must** be followed. Dead front-panelboards with no exposed current-carrying conductors, terminals, or contacts are generally required. Underwriters Laboratories also establishes the standards for the internal construction of panelboards and enclosures.

Batteries

In general, *NEC* Articles 480 and 690-71, 72, 73 should be followed for installations having storage batteries. Battery storage in PV systems poses several safety hazards:

- Hydrogen gas generation from charging batteries
- High short-circuit current
- Acid or caustic electrolyte
- Electric shock potential

HYDROGEN GAS

When flooded, non-sealed, lead-acid batteries are charged at high rates, or when the terminal voltage reaches 2.3 - 2.4 volts per cell, the batteries produce hydrogen gas. Even sealed batteries may vent hydrogen gas under certain conditions. This gas, if confined and not properly vented, poses an explosive hazard. The amount of gas generated is a function of the battery temperature, the voltage, the charging current, and the battery-bank size. Hydrogen is a light, small-molecule gas that is easily dissipated and is very difficult to contain. Small battery banks (i.e., up to 20, 220-amp-hour, 6-volt batteries) placed in a large room or a well-ventilated (drafty) area may not pose a significant hazard. Larger numbers of batteries in smaller or tightly enclosed areas require venting. Venting manifolds attached to each cell and routed to an exterior location are not recommended because flames in one section of the manifold may be easily transmitted to other areas in the system. The instructions provided by the battery manufacturer should be followed.

Closed battery boxes with vents to outside-the-house air may pose problems unless carefully designed. Wind may force hydrogen back down the vent.

A catalytic recombiner cap (Hydrocap® Appendix A) may be attached to each cell to recombine some of the evolved hydrogen and oxygen to produce water. If these combiner caps are used, they will require occasional maintenance. It is rarely necessary to use power venting [*NEC* Handbook 480-8]. Flame arrestors are required by *NEC* Section 480-9, and battery manufacturers can provide special vent caps with flame-arresting properties.

Certain charge controllers are designed to minimize the generation of hydrogen gas, but lead-acid batteries need some overcharging to fully charge the cells. This produces gassing that should be dissipated.

In *no case* should charge controllers, switches, relays, or other devices capable of producing an electric spark be mounted in a battery enclosure or directly over a battery bank. Care **must** be exercised when routing conduit from a sealed battery box to a disconnect. Hydrogen gas may travel in the conduit to the arcing contacts of the switch.

It is suggested that any conduit openings in battery boxes be made below the tops of the batteries, since hydrogen rises in air.

BATTERY ROOMS AND CONTAINERS

Battery systems are capable of generating thousands of amps of current when shorted. A short circuit in a conductor not protected by overcurrent devices can melt wrenches or other tools, battery terminals and cables, and spray molten metal around the room. Exposed battery terminals and cable connections **must** be protected. Live parts of batteries **must** be guarded [690-71]. This generally means

that the batteries should be accessible only to a qualified person. A locked room, battery box, or other container and some method to prevent access by the untrained person should reduce the hazards from short circuits and electric shock. The danger may be reduced if insulated caps or tape are placed on each terminal and an insulated wrench is used for servicing, but in these circumstances, corrosion may go unnoticed on the terminals. The *NEC* requires certain spacings around battery enclosures and boxes to allow for unrestricted servicing—generally about three feet [110-16]. Batteries should not be installed in living areas, nor should they be installed below any enclosures, panelboards, or load centers [110-26].

One of the more suitable, readily available battery containers is the lockable, heavy-duty black polyethylene tool box. Such a box can hold up to four L-16 size batteries and is easily cut for ventilation holes in the lid and for conduit entrances.

ACID OR CAUSTIC ELECTROLYTE

A thin film of electrolyte can accumulate on the tops of the battery and on nearby surfaces. This material can cause flesh burns. It is also a conductor and, in high-voltage battery banks, poses a shock hazard, as well as a potential ground-fault path. The film of electrolyte should be removed periodically with an appropriate neutralizing solution. For lead-acid batteries, a dilute solution of baking soda and water works well. Commercial neutralizers are available at auto-supply stores.

Charge controllers are available that minimize the dispersion of the electrolyte and water usage because they minimize battery gassing. They do this by keeping the battery voltage from climbing into the vigorous gassing region where the high volume of gas causes electrolyte to mist out of the cells. A moderate amount of gassing is necessary for proper battery charging and de-stratification of the electrolyte in flooded cells.

Battery servicing hazards can be minimized by using protective clothing including face masks, gloves, and rubber aprons. Self-contained eyewash stations and neutralizing solution would be beneficial additions to any battery room. Water should be used to wash acid or alkaline electrolyte from the skin and eyes.

Anti-corrosion sprays and greases are available from automotive and battery supply stores and they generally reduce the need to service the battery bank. Hydrocap® Vents also reduce the need for servicing by reducing the need for watering.

ELECTRIC SHOCK POTENTIAL

Storage batteries in dwellings **must** operate at less than 50 volts (48-volt nominal battery bank) unless live parts are protected during routine servicing [690-71b(2)].

It is recommended that live parts of any battery bank should be guarded [690-71b(2)].

Generators

Other electrical power generators such as wind, hydro, and gasoline/propane/diesel **must** comply with the requirements of the *NEC*. These requirements are specified in the following *NEC* articles:

Article 230	Services
Article 250	Grounding
Article 445	Generators
Article 700	Emergency Systems
Article 701	Legally Required Standby Systems
Article 702	Optional Standby Systems
Article 705	Interconnected Power Production Sources

When multiple sources of ac power are to be connected to the PV system, they **must** be connected with an appropriately rated and approved transfer switch. AC generators frequently are rated to supply larger amounts of power than that supplied by the PV/battery/inverter. The transfer switches (external to the inverter or a relay built into listed inverters) **must** be able to safely accommodate either power source.

Grounding, both equipment and system, **must** be carefully considered when a generator is connected to an existing system. There **must** be no currents flowing in the equipment-grounding conductor under any operating mode of the system. Bonds (connections) between the ac neutral and ground in generators are common and do cause problems.

The circuit breakers or fuses that are built into the generator are not sufficient to provide *NEC* required protection for the conductors from the generator to the PV system. An external (branch circuit rated) overcurrent device (and possibly a disconnect) **must** be mounted close to the generator. The conductors from the generator to this overcurrent device **must** have an ampacity of 115% of the name plate current rating of the generator [445-5]. Figure 18 shows a typical one-line diagram for a system with a backup generator.

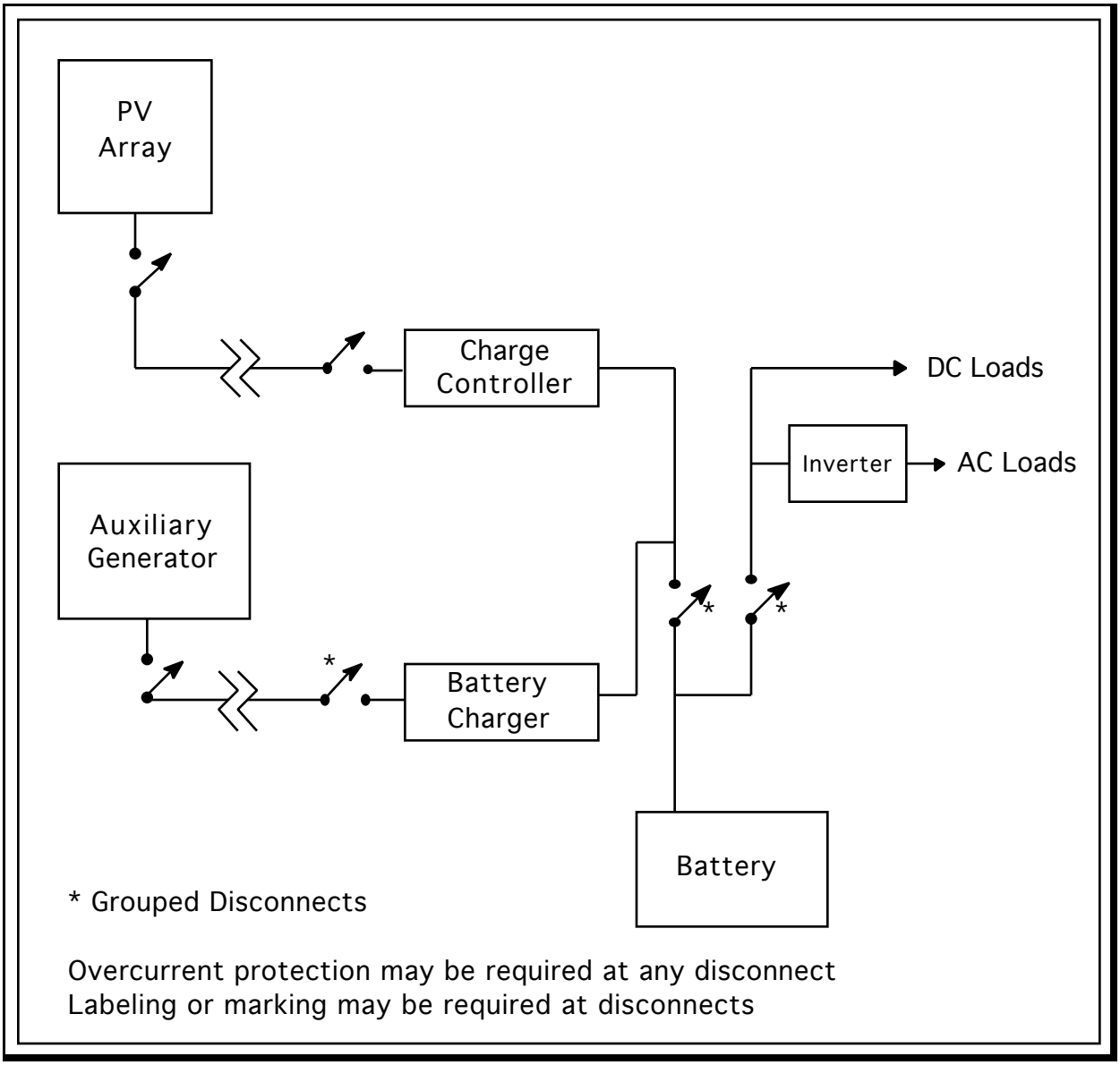

Figure 18. Disconnects for Remotely Located Power Sources

Charge Controllers

A charge controller or self-regulating system **shall** be used in a stand-alone system with battery storage. The mechanism for adjusting state of charge **shall** be accessible only to qualified persons [690-72].

There are several charge controllers on the market that have been tested and listed by UL or other recognized testing organizations.

Surface mounting of devices with external terminals readily accessible to the unqualified person will not be accepted by the inspection authority. These charge controllers should be mounted in a

listed enclosure with provisions for ventilation. Dead-front panels with no exposed contacts are generally required for safety. A typical charge controller such as shown in Figure 19 should be mounted in a listed enclosure so that none of the terminals are exposed. Enclosures containing charge controllers should have knockouts for cable entry and some method of attaching conduit where required. Internal space **must** be allocated to provide room for wire bending [373, 384].

Electrically, charge controllers should be designed with a “straight” conductor between the negative input and output terminals. No shunts or other signal processing should be placed in that conductor. This design will allow the controller to be used in a grounded system with the grounded conductor running through the controller. The design of the charge controller must be reviewed to ensure proper system grounding.

Figure 19. Typical Charge Controller

Inverters

Inverters can have stand-alone, utility-interactive, or combined capabilities.

The ac output wiring is not significantly different than the ac wiring in residential and commercial construction, and the same general requirements of the code apply. In the case of utility-interactive systems and combined systems, ac power may flow through circuits in both directions. This two-way current flow will normally require overcurrent devices at both ends of the circuit.

The dc input wiring associated with stand-alone or hybrid inverters is the same as the wiring described for batteries. Most of the same rules apply; however, the calculation of the dc input

current needs special consideration since the *NEC* does not take into consideration some of the finer points required to achieve the utmost in reliability. Appendix F discusses these special requirements in greater detail.

The dc input wiring associated with utility-interactive inverters is similar, in most cases, to the wiring in PV source and output circuits.

Inverters with combined capabilities will have both types of dc wiring: connections to the batteries and connections to the PV modules.

Distribution Systems

The *National Electrical Code* has evolved to accommodate supplies of relatively cheap energy. As the Code was expanded to include other power systems such as PV, many sections were not modified to reflect the recent push toward more efficient use of electricity in the home. Stand-alone PV systems may be required to have dc services with 60- to 100-amp capacities to meet the Code [230-79]. DC receptacles and lighting circuits may have to be as numerous as their ac counterparts [220, 422]. In a small one- to four-module system on a remote cabin where no utility extensions or local grids are possible, these requirements may be excessive, since the power source may be able to supply only a few hundred watts of power.

Changes in the *1999 NEC* in Section 690-10 have clarified some of the code requirements for stand-alone PV systems.

The local inspection authority has the final say on what is, or is not, required and what is, or is not, safe. Reasoned conversations may result in a liberal interpretation of the Code. For a new dwelling, it seems appropriate to install a complete ac electrical system as required by the *NEC*. This will meet the requirements of the inspection authority, the mortgage company, and the insurance industry. Then the PV system and its dc distribution system can be added. If an inverter is used, it can be connected to the ac service entrance. *NEC* Section 690 elaborates on these requirements and allowances. DC branch circuits and outlets can be added where needed, and everyone will be happy. If or when grid power becomes available, it can be integrated into the system with minimum difficulty. If the building is sold at a later date, it will comply with the *NEC* if it has to be inspected. The use of a listed dc power center will facilitate the installation and the inspection.

Square D has received a direct current (dc), UL listing for its standard QO residential **branch** circuit breakers. They can be used up to 48 volts (125% PV open-circuit voltage) and 70 amps dc. This would limit their use to a 12-volt nominal system and a few 24-volt systems in hot climates [Table 690-7]. The AIR is 5,000 amps, so a current-limiting fuse (RK5 or RK1 type) **must** be used when they are connected on a battery system. The Square D QOM **main** breakers (used at the top of the load center) **do not** have this listing, so the load center **must** be obtained with main lugs and no main breakers (Appendix A).

In a small PV system (less than 5000 amps of available short-circuit current), a two-pole Square D QO breaker could be used as the PV disconnect (one pole) and the battery disconnect (one pole). Also, a fused disconnect or fusible pullout could be used in this configuration. This would give a little more flexibility since the fuses can have different current ratings. Figure 15 on page 36 shows both systems with only a single branch circuit.

In a system with several dc branch circuits, the Square D QO load center can be used. A standard, off-the-shelf Square D QO residential load center without a main breaker can be used for a dc distribution panel in 12-volt dc systems and some hot-climate 24-volt systems. The main disconnect would have to be a “back fed” QO breaker, and it would have to be connected in one of the normal branch circuit locations. Back-fed circuit breakers **must** be identified for such use [690-64b(5)]. Since the load center has two separate circuits (one for each line), the bus bars will have to be tied together to use the entire load center. Figure 20 illustrates this use of the Square D load center.

Another possibility is to use one of the line circuits to combine separate PV source circuits, then go out of the load center through a breaker acting as the PV disconnect switch to the charge controller. Finally, the conductors would have to be routed back to the other line circuit in the load center for branch-circuit distribution. Several options exist in using one and two-pole breakers for disconnects. Figure 21 presents an example.

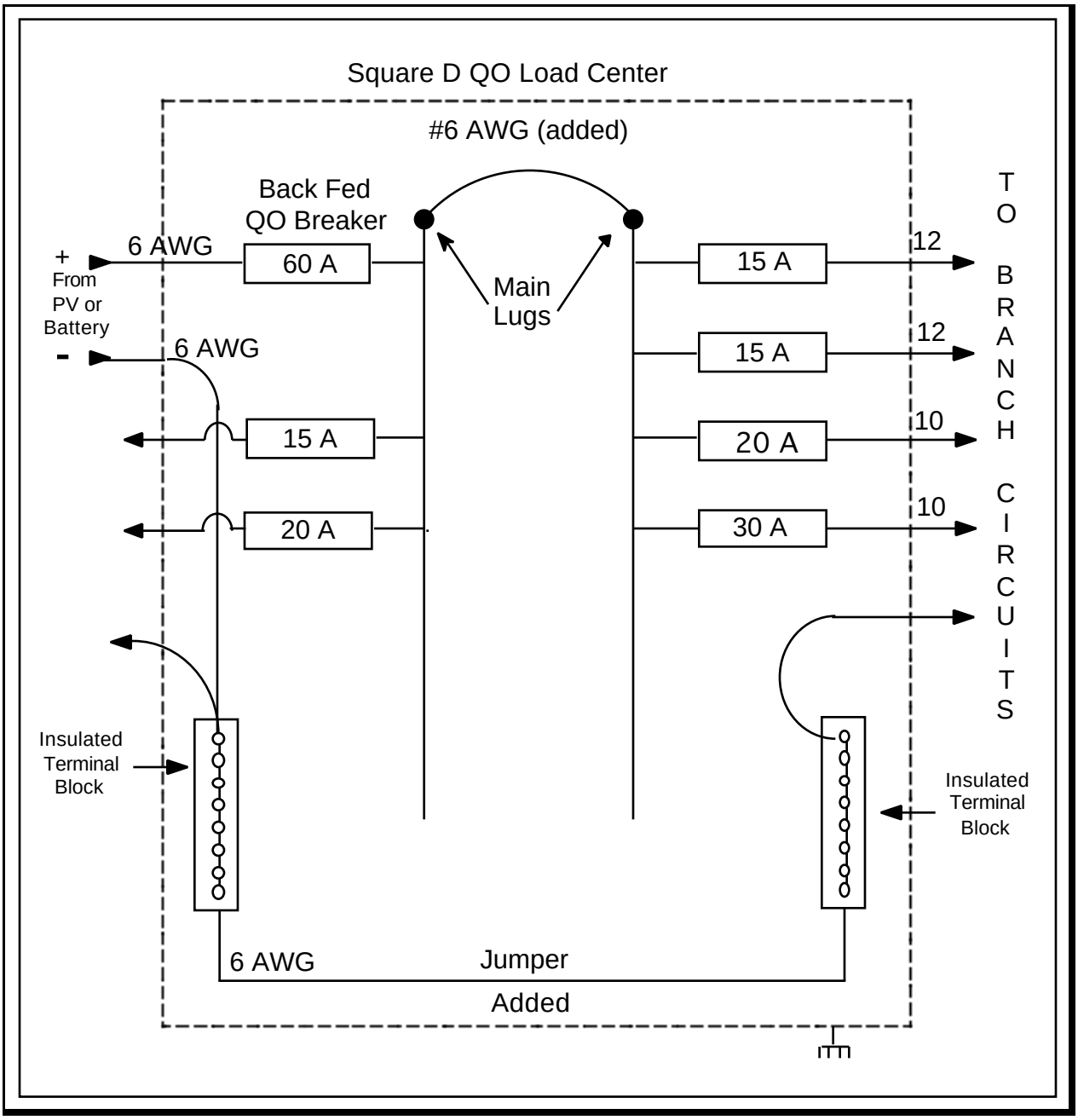

Figure 20. 12-Volt DC Load Center

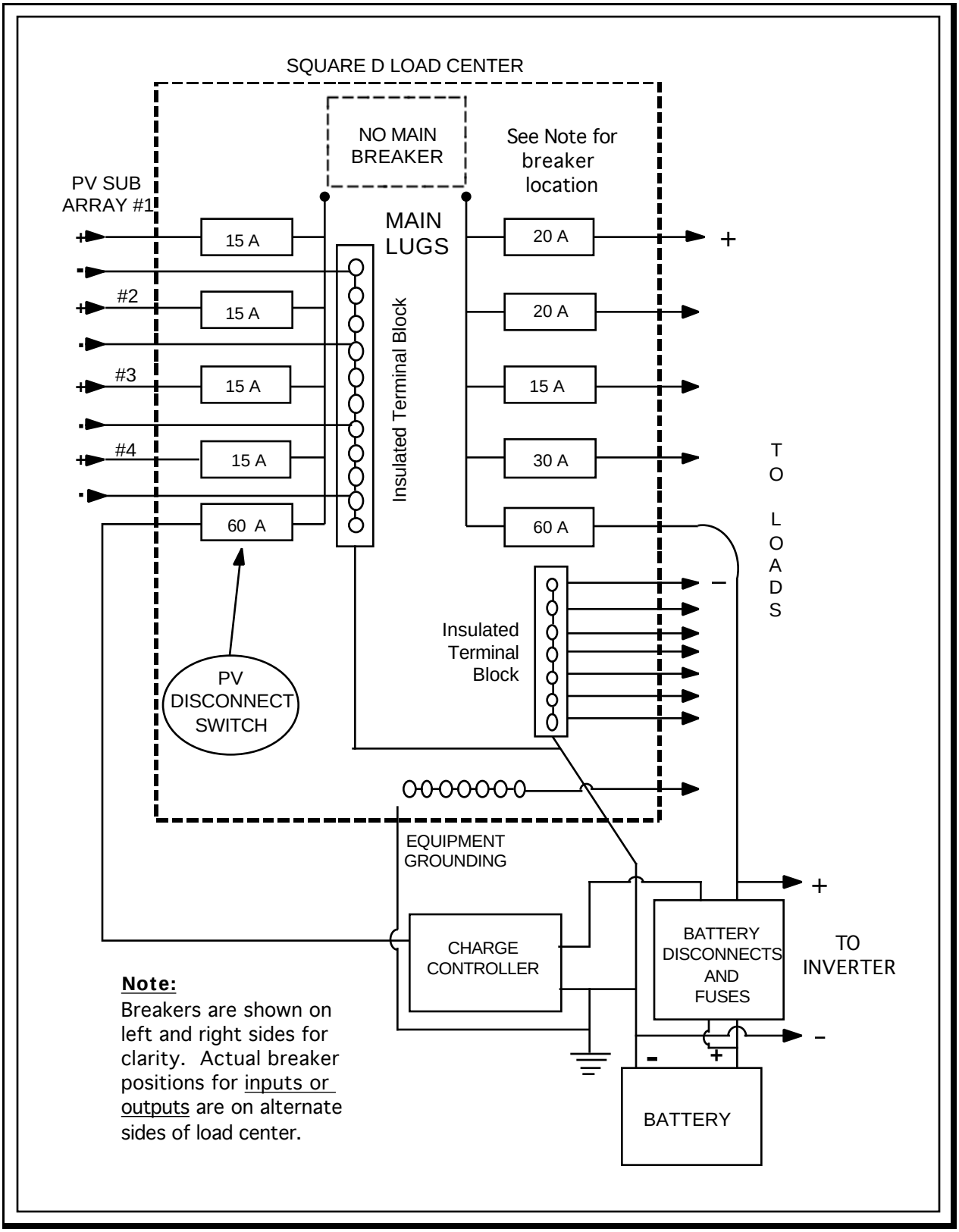

Figure 21. 12-Volt DC Combining Box and Load Center

INTERIOR WIRING AND RECEPTACLES

Any dc interior wiring used in PV systems **must** comply with the *NEC* [300]. Nonmetallic sheathed cable (type NM - "Romex") may be used, and it **must** be installed in the same manner as cable for ac branch circuits [336, 690-31a]. The bare grounding conductor in such a cable **must not** be used to carry current and cannot be used as a common negative conductor for combination 12/24-volt systems [336-30(b)]. Exposed, single-conductor cables are not permitted—they **must** be installed in conduit [300-3(a)]. Wires carrying the same current (i.e., positive and negative battery currents) **must** be installed in the same conduit or cable to prevent increased circuit inductances that would pose additional electrical stresses on disconnect and overcurrent devices [300-3(b)].

Equipment-grounding conductors for dc circuits only may be run apart from the current-carrying conductors [250-134(b) Ex2]. However, separating the equipment grounding conductor from the circuit conductors may increase the fault circuit time constant and impair the operation of overcurrent devices. The effects of transient pulses are also enhanced when equipment grounding conductors are separate. It is suggested that equipment-grounding conductors be run in the same conduit or cable as the circuit conductors.

The receptacles used for dc **must** be different than those used for any other service in the system [210-7f, 551-20f]. The receptacles should have a rating of not less than 15 amps and **must** be of the three-prong grounding type [210-7a, 720-6]. Numerous different styles of listed receptacles are available that meet this requirement. These requirements can be met in most locations by using the three-conductor 15-, 20-, or 30-amp 240-volt NEMA style 6-15, 6-20, 6-30 receptacles for the 12-volt dc outlets. If 24-volt dc is also used, the NEMA 125-volt locking connectors, style L5-15 or L5-20, are commonly available. The NEMA FSL-1 is a locking 30-amp 28-volt dc connector, but its availability is limited. Figure 22 shows some of the available configurations. Cigarette lighter sockets and plugs frequently found on “PV” and “RV” appliances do not meet the requirements of the *National Electrical Code* and should not be used.

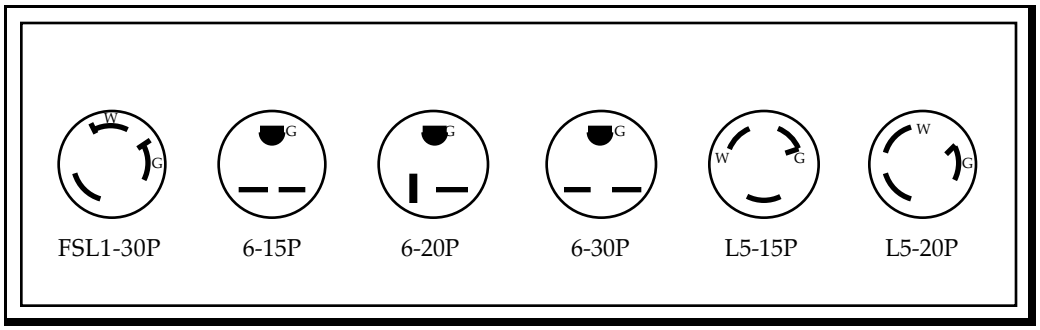

Figure 22. NEMA Plug Configurations

It is not permissible to use the third or grounding conductor of a three-conductor plug or receptacle to carry common negative return currents on a combined 12/24-volt system. This terminal **must** be used for equipment grounding and may not carry current except in fault conditions [210-7].

A 30-amp fuse or circuit breaker protecting a branch circuit (with 10 AWG conductors) **must** use receptacles rated at 30 amps. Receptacles rated at 15 and 20 amps **must not** be used on this 30-amp circuit [Table 210-24].

SMOKE DETECTORS

Many building codes require that smoke and fire detectors be wired directly into the ac power wiring of the dwelling. With a system that has no inverter, two solutions might be offered to the inspector. The first is to use the 9-volt or other primary-cell, battery-powered detector. The second is to use a voltage regulator to drop the PV system voltage to the 9-volt or other level required by the detector.

The regulator **must** be able to withstand the PV open-circuit voltage and supply the current required by the detector alarm.

On inverter systems, the detector on some units may trigger the inverter into an "on" state, unnecessarily wasting power. In other units, the alarm may not draw enough current to turn the inverter on and thereby produce a reduced volume alarm or, in some cases, no alarm at all. Small, dedicated inverters might be used, but this would waste power and decrease reliability when dc detectors are available.

Many states require detectors to be connected to the power line and have a battery backup. Units satisfying this requirement might also be powered by dc from the PV system battery and by a primary cell.

GROUND-FAULT CIRCUIT INTERRUPTERS

Some ac ground-fault circuit interrupters (GFCI) do not operate reliably on the output of some non-sine-wave inverters. If the GFCI does not function when tested, it should be verified that the neutral (white-grounded) conductor of the inverter output is solidly grounded and bonded to the grounding (green or bare) conductor of the inverter in the required manner. If this bond is present and does not result in the GFCI testing properly, other options are possible. Changing the brand of GFCI may rectify the solution. A direct measurement of an intentional ground fault may indicate that slightly more than the 5 milliamp internal test current is required to trip the GFCI. The inspector may accept this. Some inverters will work with a ferro-resonant transformer to produce a wave form more satisfactory for use with GFCIs, but the no-load power consumption may be high

enough to warrant a manual demand switch. A sine-wave inverter should be used to power those circuits requiring GFCI protection.

The 1999 *NEC* added a Section 690-6(d) permitting (not requiring) the use of a device (undefined) on the ac branch circuit being fed by an ac PV module to detect ground-faults in the ac wiring. There are no commercially available devices as of early 2001 that can meet this permissive requirement. Standard 5-milliamp anti-shock receptacle GFCIs or 30-milliamp equipment protection circuit breakers should not be used for this application. They may be destroyed if used for this application

INTERIOR SWITCHES

Switches rated for ac only **shall not** be used in dc circuits [380-14]. AC-DC general-use snap switches are available by special order from most electrical supply houses, and they are similar in appearance to normal "quiet switches" [380-14(b)].

Note: There have been some failures of dc-rated snap switches when used as PV array and battery disconnect switches. If these switches are used on 12- and 24-volt systems and are not activated frequently, they may build up internal oxidation or corrosion and not function properly. Periodically activating the switches under load will keep them clean.

MULTIWIRE BRANCH CIRCUITS

Stand-alone PV and PV/Hybrid systems are frequently connected to a building/structure/house that has been previously completely wired for 120/240-volts ac and has a standard service entrance and load center.

These structures may employ one or more circuits that the *National Electrical Code* (*NEC*) defines as a multiwire branch circuit. See Section 100 in the *NEC*, "Branch Circuit, Multiwire." These circuits take a three-conductor plus ground feeder from the 120/240-volt load center and run it some distance to a location in the structure where two separate 120-volt branch circuits are split out. Each branch circuit uses one of the 120-volt hot, ungrounded conductors from the 120/240-volt feeder and the common neutral conductor. See Figure 23.

In a utility-connected system or a stand-alone system with a 120/240-volt stacked pair of inverters, where the 120/240-volt power consists of two 120-volt lines that are 180 degrees out of phase, the currents in the common neutral in the multiwire branch circuit are limited to the difference currents from any unbalanced load. If

the loads on each of the separate branch circuits were equal, then the currents in the common neutral would be zero.

A neutral conductor overload may arise when a single 120-volt inverter is tied to both of the hot input conductors on the 120/240-volt load center as shown in Figure 23. This is a common practice for stand-alone PV homes. At this point the two hot 120-volt conductors are being delivered voltage from the single 120-volt inverter and that voltage is in phase on both conductors. In multiwire branch circuits, the return currents from each of the separate branch circuits in the common neutral add together. A sketch of the multiwire branch circuit is presented in Figure 23.

Each branch circuit is protected by a circuit breaker in the ungrounded conductor in the load center. The neutral conductor is usually the same size as the ungrounded conductors and can be overloaded with the in-phase return currents. The circuit breakers will pass current up to the ampacity of the protected conductors, but when both branch circuits are loaded at more than 50%, the unprotected, common neutral conductor is overloaded and may be carrying up to twice the currents that it was rated for.

A definite fire and safety hazard exists. All existing stand-alone PV installations using single inverters tied to both ungrounded conductors at the service entrance should be examined for multiwire branch circuits.

The *NEC* requires that multiwire branch circuits in some, but not all, cases use a two-pole circuit breaker so that both circuits are dead at the same time under fault conditions and for servicing. This two-pole, side-by-side circuit breaker rated at 15 or 20 amps may be one indication that multiwire branch circuits have been used. Common handle circuit breakers rated at 30 amps and higher are usually dedicated to 240-volt circuits for ranges, hot water heaters, dryers, and the like.

Examination of the wiring in the load center may show a three-wire cable (14 or 12 AWG red, black, and white conductors) with bare ground leaving the load center. This may be connected to a multiwire branch circuit. The circuit breakers connected to this cable and the outputs of this cable should be traced to determine the presence or absence of a multiwire branch circuit.

The following options are suggested for dealing with this problem:

- Disconnect or rewire the multiwire circuits as separate circuits (“home runs”) from the load center.

- Connect both "hot" (ungrounded) conductors of the multiwire branch circuit to a single circuit breaker rated for the ampacity of the neutral conductor.

- Limit the output of the inverter with a circuit breaker rated at the ampacity of the neutral conductor (usually 15 amps). Place a warning near this circuit breaker stating that the rating **must not** be increased.

- Install a transformer to provide a 120/240-volt output from a 120-volt inverter.

- Install a stacked pair of inverters to provide 120/240V ac.

In systems where multiwire branch circuits are used with stacked (120/240-volt) inverters, a sign should be placed near the inverters warning that single inverter use (one inverter removed for repair and the system is rewired to accommodate all branch circuits) may cause overloaded circuits. The maximum current from the single inverter should be limited to the ampacity of the common neutral conductor.

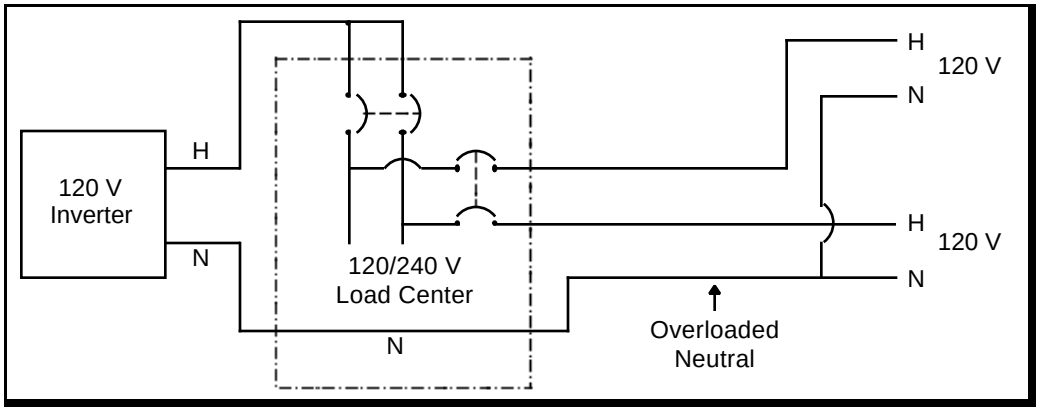

Figure 23. Diagram of a Multiwire Branch Circuit

In all systems (multiwire or not), the neutral busbar of the load center **must** be rated at a higher current than the output of the inverter. In other words, do not connect an inverter with a 33-amp output to a load center rated at 20 or 30 amps.

Additional information is found in the *NEC* in sections 100, 210-4, 240-20(b), and 300-13(b), and in the *NEC* Handbook. Section 690-10 provides requirements and allowances on connecting a single inverter to a code-compliant ac wiring system.

AC PV Modules

An AC PV module is a photovoltaic device that has an alternating current output (usually 120 volts at 60 Hz in the U.S.). It is listed (by UL) as a unified device and is actually a standard dc PV module with an attached (non-removable) utility-interactive inverter. The ac output is only available when the ac PV module is connected to a utility grid circuit where there is a stable 120 volts at 60 Hz present. With no utility power, there will be NO energy flow from the ac PV modules.

A number of ac PV modules may be connected on the same circuit (according to ampacity limitations), but that circuit **must** be dedicated to the ac PV module(s) and **must** terminate in a dedicated circuit breaker.

There are no external dc circuits in the ac PV module and none of the dc code requirements apply. Unlisted combinations of small listed inverters mated to listed dc PV modules do not quality as an ac PV module and will have to have all code-required dc switchgear, overcurrent, and ground-fault equipment added.

AC PV modules **shall** be marked with the following:

- Nominal AC Voltage
- Nominal AC Frequency
- Maximum AC Power
- Maximum AC Current
- Maximum Overcurrent Device Rating for AC Module Protection [690-52]

System Labels and Warnings

PHOTOVOLTAIC POWER SOURCE

A permanent label **shall** be applied near the PV disconnect switch that contains the following information: [690-53]

- Operating Current (System maximum-power current)
- Operating Voltage (System maximum-power voltage)
- Maximum System Voltage
- Short-Circuit Current

This data will allow the inspector to verify proper conductor ampacity and overcurrent device rating. It will also allow the user to compare system performance with the specifications.

MULTIPLE POWER SYSTEMS

Systems with multiple sources of power such as PV, gas generator, wind, hydro, etc., **shall** have a permanent plaque or directory showing the interconnections [705-10]. Diagrams are not required, but may be useful and should be placed near the system disconnects.

INTERACTIVE SYSTEM POINT OF INTERCONNECTION

All interactive system(s) points of interconnection with other sources **shall** be marked at an accessible location at the disconnecting means as a power source with the maximum ac output operating current and the operating ac voltage [690-54].

SWITCH OR CIRCUIT BREAKER

If a switch or circuit breaker has all of the terminals energized when in the open position, a label should be placed near it indicating: [690-17]

WARNING - ELECTRIC SHOCK HAZARD - DO NOT TOUCH TERMINALS. TERMINALS ON BOTH THE LINE AND LOAD SIDES MAY BE ENERGIZED IN THE OPEN POSITION

GENERAL

Each piece of equipment that might be opened by unqualified persons should be marked with warning signs:

WARNING - ELECTRIC SHOCK HAZARD - DANGEROUS VOLTAGES AND CURRENTS - NO USER SERVICEABLE PARTS INSIDE - CONTACT QUALIFIED SERVICE PERSONNEL FOR ASSISTANCE

Each battery container, box, or room should also have warning signs:

WARNING - ELECTRIC SHOCK HAZARD - DANGEROUS VOLTAGES AND CURRENTS - EXPLOSIVE GAS - NO SPARKS OR FLAMES - NO SMOKING - ACID BURNS - WEAR PROTECTIVE CLOTHING WHEN SERVICING

Inspections

Involving the inspector as early as possible in the planning stages of the system will begin a process that should provide the best chance of obtaining a safe, durable system. The following steps are suggested.

- Establish a working relationship with a local electrical contractor or electrician to determine the requirements for permits and inspections.
- Contact the inspector and review the system plans. Solicit advice and suggestions from the inspector.
- Obtain the necessary permits.
- Involve the inspector in the design and installation process. Provide information as needed. Have one-line diagrams and complete descriptions of all equipment available.

Insurance

Most insurance companies are not familiar with photovoltaic power systems. They are, however, willing to add the cost of the system to the homeowner's policy if they understand that it represents no additional liability risk. A system description may be required. Evidence that the array is firmly attached to the roof or ground is usually necessary. The system **must** be permitted and inspected if those requirements exist for other electrical power systems in the locale.

Some companies will not insure homes that are not grid connected because there is no source of power for a high-volume water pump for fighting fires. In these instances, it may be necessary to install a fire-fighting system and water supply that meets their requirements. A high-volume dc pump and a pond might suffice.

As with the electrical inspector, education and a full system description emphasizing the safety features and code compliance will go a long way toward obtaining appropriate insurance.

APPENDIX A

Sources of Equipment Meeting the Requirements of The *National Electrical Code*

A number of PV distributors and dealers are stocking the equipment needed to meet the *NEC* requirements. Some sources are presented here for specialized equipment, but this list is not intended to be all-inclusive or to promote any of the products.

CONDUCTORS

Standard multiconductor cable such as 10-2 with ground Nonmetallic Sheathed Cable (NM and NMC), Underground Feeder (UF), Service Entrance (SE), Underground Service Entrance (USE and USE-2), larger sizes (8 AWG) single-conductor cable, uninsulated grounding conductors, and numerous styles of building wire such as THHN can be obtained from electrical supply distributors and building supply stores.

The highest quality USE-2 cable will be listed by UL and will also have RHW-2, and 600V markings. Flexible USE, RHW, and THW cables in large sizes (1/0 - 250 kcmil) and stranded 8-, 10-, and 12-gage USE single conductor cable can be obtained from some electrical supply houses and wire distributors, including:

Anixter Bros.
2201 Main Street
Evanston, Illinois 60202
800-323-8166 for the nearest distributor
847-677-2600

Cobra Wire and Cable, Inc.
PO Box 790
2930 Turnpike Drive
Hatboro, PA 19040
215-674-8773

For grid-connected systems requiring cables with voltage rating higher than 600V, cable is normally special-ordered. Rubber-insulated cables are available with up to 2,000-volt insulation. They should be marked RHW-2 and be sunlight resistant when used for exposed module interconnects. The following manufacturers can supply such cable.

American Insulated Wire
36 Freeman Street
P.O. Box 880
Pawtucket, RI 02862
401-726-0700

The Okonite Company
PO Box 340
Romsey, NJ 07446
201-825-9026

MISCELLANEOUS HARDWARE

Stainless steel nuts, bolts and screws, and other hardware, insulated and uninsulated crimp-on terminals, battery terminals, copper lugs for heavy cable, battery cable, weather-resistant cable ties, heat shrink tubing and more may be obtained from the following source:

Chesapeake Marine Fasteners
10 Willow Street
P.O. Box 6521
Annapolis, Maryland 21401
800-526-0658
410-266-9332

Dealer's price sheet is available

The company listed below makes plastic strain reliefs that fit the standard 1/2" electrical knockout (7/8" diameter). These watertight strain reliefs are needed for older ARCO PV modules, some BP Solar modules, as well as others. The single-conductor versions are hard to find, and the metal types are very expensive. A catalog and information on product 3224 (for AWG 10) or 3231 (for larger wire) can be requested. The company also makes UV-resistant black cable ties and copper, heavy-duty lugs, as well as other products that might be useful.

Heyco Molded Products, Inc.
Box 160
Kenilworth, New Jersey 07033
800-526-4182 or 908-245-0033
Quantity purchases only; call for distributor locations

DC-RATED FUSES

DC-rated 15, 20, 30 amp and higher rated fuses can be used for branch-circuit overcurrent protection depending on conductor ampacity and load. Larger sizes (100 amp and up) are used for current-limiting and overcurrent protection on battery outputs. DC rated, UL-Listed fuses are manufactured by the following companies, among others:

Bussmann
P.O. Box 14460
St. Louis, MO 63178-4460
314-527-3877
314-527-1270 (Technical Questions)

Gould/Ferraz Inc.
374 Merrimac Street
Newburyport, MA 01950
508-462-6662

Littelfuse
Power Fuse Division
800 E. Northwest Highway
Des Plaines, Illinois 60016
(708) 824-1188
800-TEC FUSE (Technical Questions)
800-227-0029 (Customer Service)

The following fuses may be used for battery circuit and branch circuit overcurrent protection and current limiting. If transients are anticipated in PV circuits, these fuses can also be used in those locations.

Fuse Description	Size	Manufacturer	Mfg #
125-volt dc, RK5 Time delay, current-limiting	0.1-600 amp	Bussmann	FRN-R
125-volt dc, RK5 Time delay, current-limiting	0.1-600 amp	Littelfuse	FLNR
300-volt dc, RK5 Time delay, current-limiting fuse	0.1-600-amp	Bussmann	FRS-R
300-volt dc, RK5 Time delay, current-limiting fuse	0.1-600 amp	Gould	TRS-R
300-volt dc, RK5 Time delay, current-limiting fuse	0.1-600 amp	Littelfuse	FLSR
600-volt dc, RK5 Time delay, current-limiting fuse	0.1-600 amp,	Littelfuse	IDSR
600-volt dc, RK5 Time delay, current-limiting fuse	70-600 amp	Gould	TRS70R -600R

The following fuses should be used for PV source-circuit protection if problems are not anticipated with transients. They may also be used inside control panels to protect relays and other equipment.

Fuse Description	Size	Manufacturer	Mfg #
Fast-acting, midget fuse	0.1-30 amp	Gould	ATM
Fast-acting, midget fuse	0.1-30 amp	Littelfuse	KLK-D

Fuse Holders (Also See Fused Disconnects)

Each fuse manufacturer makes fuse blocks matching the voltage rating and current rating of the selected fuse.

Marathon Special Projects also makes suitable fuse holders. Information and the names of distributors of Class R and Class M (midget fuse holders) should be requested. The company also makes power-distribution blocks for control panels.

Marathon Special Products
P.O. Box 468
Bowling Green, Ohio 43402
419-352-8441

Fused Disconnects (Also See Circuit Breakers)

Since fuses **must not** have power applied to either end when servicing, a combination switch and fuse can be mounted in a single enclosure to meet some, if not all, of the requirements.

Siemens I-T-E
Siemens Energy & Automation, Inc.
3333 State Bridge Rd.
Alpharetta, Georgia 30202
404-751-2000

Indoor fused switches, 250-volt dc—JN and JF series
Outdoor fused switches, 250-volt dc—JR and FR series

Call for nearest regional sales office that can direct you to a stocking distributor

Square D Company
800-634-2003 for the nearest
Square D electrical supply distributor

Indoor fused switches
250-volt-dc—H22x, H32x, and H42x series
600-volt-dc—H26xx and H36xx series

Outdoor fused switches
250-volt-dc—H22xR, H32xR, and H42xR series
600-volt-dc—H26xR and H36xR series

Boltswitch, Inc., makes pull-out fused disconnects that are dc rated for higher current applications. Contact factory for applications.

boltswitch®, inc.
6107 West Lou Avenue
Crystal Lake, IL 60014
815-459-6900

CIRCUIT BREAKERS

Square D QO circuit breakers (common ac residential breakers).
UL-Listed at 5000 AIC at 48 volts dc; 1 and 2 pole, 10-70 amps; 3 pole, 10-60 amps

Square D FA circuit breakers; 125- and 250-volt dc ratings, multiple currents

Enclosures for QO breakers
2 and 3 pole units
Indoor QO21xxBN, QO3100BN
Rainproof QO21xxBNRB, QO3100BNRB

Any of the load centers for Square D QO breakers without main breakers may be used—main lugs should be requested instead.

Square D Company
800-634-2003 for the nearest
Square D electrical distributor

Heinemann makes a full line of dc-rated, UL-Listed and recognized supplemental circuit breakers, but they **must** be mounted in custom-built enclosures. (The metal is punched by the installer).

CD-CE-CF 5000 AIC at 125-volt dc, 15-110 amp
25,000 AIC available on special order. Polyester case, spun rivets, and UL-Listed units should be requested.
GH 10,000 AIC at 250-volts dc, 15-100 amp
GJ 10,000 AIC at 125-volts dc, 100-250 amps
GJ 25,000 AIC at 65-volts dc, 100-250 amps
GJ1P 10,000 AIC at 160-volts, 25,000 AIC at 65-volts dc, 100-700 amps

Rainshadow Solar
PO Box 541
Guthrie Cove Road
Orcas, WA 98280
360-376-5336

AIRPAX also makes a full line of dc-rated, UL-Listed and recognized supplemental circuit breakers, but they **must** be mounted in custom-built enclosures.

AIRPAX Corporation
P.O. Box 520
Cambridge, MD 21613-0520
410-228-4600

Call for nearest source and catalog.
Applications engineering available.

ENCLOSURES AND JUNCTION BOXES

Indoor and outdoor (rainproof) general-purpose enclosures and junction boxes are available at most electrical supply houses. These devices usually have knockouts for cable entrances, and the distributor will stock the necessary bushings and/or cable clamps. Interior component mounting panels are available for some enclosures, as are enclosures with hinged doors. If used outdoors, all enclosures, clamps, and accessories **must** be listed for outdoor use. For visual access to the interior, NEMA 4X enclosures are available that are made of clear, transparent plastic.

HYDROCAPS

Hydrocap® Vents are available from Hydrocap Corp. and some PV distributors on a custom-manufactured basis.

Hydrocap
975 NW 95 St.
Miami, FL 33150
305-696-2504

SURGE ARRESTORS

Delta makes a full line of large, silicon-oxide surge arrestors starting at 100 volts and up that are usable on low-voltage systems to clip the tops of large surges. Low-voltage versions are also available.

Delta Lightning Arrestors Inc.
P.O. Box 1084
Big Spring, TX 79721
915-267-1000

APPENDIX B

PV Module Operating Characteristics Drive *NEC* Requirements

INTRODUCTION

As the photovoltaic (PV) power industry moves into a mainstream position in the generation of electrical power, some people question the seemingly conservative requirements established by Underwriters Laboratories (UL) and the *National Electrical Code* (*NEC*) for system and installation safety. This short discourse will address those concerns and highlight the unique characteristics of PV systems that dictate the requirements.

The *National Electrical Code* (*NEC*) is written with the requirement that all equipment and installations are approved for safety by the authority having jurisdiction (AHJ) to enforce the *NEC* requirements in a particular location. The AHJ readily admits to not having the resources to verify the safety of the required equipment and relies exclusively on the testing and listing of the equipment by independent testing laboratories such as Underwriters Laboratories (UL). The AHJ also relies on the installation requirements for field wiring specified in the *NEC* to ensure safe installations and use of the listed equipment.

The standards published by UL and the material in the *NEC* are closely harmonized by engineers and technicians throughout the electrical equipment industry, the electrical construction trades, the national laboratories, the scientific community, and the electrical inspector associations. The UL Standards are technical in nature with very specific requirements on the construction and testing of equipment for safety. They in turn are coordinated with the construction standards published by the National Electrical Manufacturers Association (NEMA). The *NEC*, however, is deliberately written in a manner to allow uniform application by electricians, electrical contractors, and electrical inspectors in the field.

The use of listed equipment (by UL or other nationally recognized laboratory) ensures that the equipment meets well-established safety standards. The application of the requirements in the *NEC* ensures that the listed equipment is properly connected with field wiring and is used in a manner that will result in an essentially hazard-free system. The use of listed equipment and installing that equipment according to the requirements in the *NEC* will contribute greatly not only to safety, but also the durability, performance, and longevity of the system.

UNSPECIFIED DETAILS

The *NEC* does not present many highly detailed technical specifications. For example, the term "rated output" is used in several cases with respect to PV equipment. The conditions under which the rating is determined are not specified. The definitions of the rating conditions (such as Standard Test Conditions (STC) for PV modules) are made in the UL Standards that establish the rated output. This procedure is appropriate because of the *NEC* level of writing and the lack of appropriate test equipment available to the *NEC* user or inspector.

NEC REQUIREMENTS BASED ON MODULE PERFORMANCE

Voltage

Section 690-7 of the *NEC* establishes a temperature-dependent voltage correction factor that is to be applied to the open-circuit voltage (Voc) in order to establish the system voltage. This factor on the open-circuit voltage is needed because, as the operating temperature of the module decreases, Voc increases. The rated Voc is measured at a temperature of 25°C and while the normal operating temperature is 40-50°C when ambient temperatures are around 20°C, there is nothing to prevent sub-zero ambient temperatures from yielding operating temperatures significantly below the 25°C standard test condition.

A typical crystalline silicon module will have a voltage coefficient of -0.38%/°C. A system with a rated open-circuit voltage of 595 volts at 25°C might be exposed to ambient temperatures of -30°C. This voltage (595) could be handled by the common 600-volt rated conductors and switchgear. At dawn and dusk conditions, the module will be at the ambient temperature of -30°C, will not experience any significant heating, but can generate open-circuit voltages of 719 volts (595 x (1 + (25 + 30) x 0.0038)). This voltage substantially exceeds the capability of 600-volt rated conductors, fuses, switchgear, and other equipment. High wind speeds can also cause modules to operate at or near ambient temperatures, even in the presence of moderate levels of sunlight. The very real possibility of this type of condition substantiates the *NEC* requirement for the temperature dependent factor on the rated open-circuit voltage.

Thin film PV technologies may have other voltage-temperature relationships, and the manufacturers of modules employing such technologies should be consulted for the appropriate data.

Current

NEC Section 690-8(a) requires that the rated (at STC) short-circuit current of the PV module be multiplied by 125% before any other factors, such as continuous current and conduit fill factors, are applied. This factor is to provide a safe margin for wire sizes and overcurrent devices when the irradiance exceeds the standard 1000 W/m^2. Depending on season, local weather conditions, and atmospheric dust and humidity, irradiance exceeds 1000 W/m^2 every day around solar noon. The time period can be as long as four hours with irradiance values approaching 1200 W/m^2, again depending on the aforementioned conditions and the type of tracking being used. These daily irradiance values can increase short-circuit currents 20% over the 1000 W/m^2 value. Since these increased currents can be present for three hours or more, they are considered continuous currents. By multiplying the short-circuit current by 125%, the PV output currents are adjusted in a manner that puts them on the same basis as other continuous currents in the *NEC*

Enhanced irradiance due to reflective surfaces such as sand, snow, or white roofs, and even nearby bodies of water can increase short-circuit currents by substantial amounts and for significant periods of time. Cumulus clouds also can increase irradiance by as much as 50%. These transient factors are not considered continuous and are not addressed by either UL or the *NEC*

Another factor that must be addressed is that PV modules typically operate at 30-40°C above the ambient temperatures when not exposed to cooling breezes. In crystalline silicon PV modules, the short-circuit current increases as the temperature increases. A typical factor might be 0.1%/°C. If the module operating temperature was 60°C (35°C over the STC of 25°C), the short-circuit current would be 3.5% greater than the rated value. PV modules have been measured operating over 75°C. The combination of increased operating temperatures, irradiances over 1000 W/m^2 around solar noon, and the possibility of enhanced irradiance certainly justify the *NEC* requirement [690-8(a)] of 125% on the rated short-circuit current.

ADDITIONAL *NEC* REQUIREMENTS

The *NEC* requires that the continuous current of any circuit be multiplied by 125% before calculating the ampacity of any cable or the rating of any overcurrent device used in these circuits [690-8(b) and 240]. This factor is in addition to the required 125% discussed above and is needed to ensure that overcurrent devices and conductors are not operated above 80% of rating.

Since short-circuit currents in excess of the rated value are possible from the discussion of the Section 690-8(a) requirements above, and these currents are

independent of the requirements established by Section 690-8(b), the *NEC* dictates that both factors will be used at the same time. This yields a multiplier on short-circuit current of 1.56 (125% x 125%).

The *NEC* also requires that the ampacity of conductors be derated for the operating temperature of the conductor. This is a requirement because the ampacity of cables is given for cables operating in an ambient temperature of 30°C. In PV systems, cables are operated in an outdoor environment and should be subjected at least to a temperature derating due to an ambient temperature of 40°C to 45°C. PV modules operate at high temperatures and, in some installations, may be over 75°C. Concentrating modules operate at even higher temperatures. The temperatures in module junction boxes approach these temperatures. Conductors in free air that lie against the back of these modules are also exposed to these temperatures. Temperatures this high require that the ampacity of cables be derated by factors of 0.33 to 0.58 depending on cable type, installation method (free air or conduit), and the temperature rating of the insulation [310-16,-17].

Cables in conduit where the conduit is exposed to the direct rays of the sun are also exposed to elevated operating temperatures.

Cables with insulation rated at 60°C have no ampacity at all when operated in environments with ambient temperatures over 55°C. This precludes their use in most PV systems. Cables with 75°C insulation have no ampacity when operated in ambient temperatures above 70°C. Because PV modules may operate at temperatures in the 45-75°C range, it is strongly suggested that only cables with an insulation rated at 90°C be used.

SUMMARY

The conditions under which PV modules operate (high and low ambient temperatures, high and low winds, high and low levels of sunlight) and the electrical characteristics of those modules dictate that all of the requirements in the *NEC* be fully considered and applied.

There appears to be little question that the temperature-dependent correction factor on voltage is necessary in any location where the ambient temperature drops below 25°C. Even though the PV system can provide little current under open-circuit voltage conditions, these high voltages can damage electronic equipment and stress conductors and other equipment by exceeding their voltage breakdown ratings.

In ambient temperatures from 25 to 40°C and above, module short-circuit currents are increased at the same time conductors are being subjected to higher operating temperatures. Irradiance values over the standard rating condition may occur

every day. Therefore the *NEC* requirements for adjusting the short-circuit current are necessary to ensure a safe and long-lived system.

APPENDIX C

Grid-Connected Systems

Grid-connected systems present some unique problems for the PV designer and installer in meeting the *NEC.*

INVERTERS

Some of the grid-tied inverters that are available do not currently meet UL *Standard 1741* for inverters. Some of the inverters cannot have both the dc PV circuits and the ac output circuits grounded without causing parallel ground current paths. Newer versions of these inverters may have solutions for this problem.

Other inverters have the internal circuitry tied to the case and force the central grounding point to be at the inverter input terminals. In some installations, this design is not compatible with ground-fault equipment and does not provide the flexibility needed for maximum surge suppression.

PV SOURCE-CIRCUIT CONDUCTORS

Some older grid-tied inverters operate with PV arrays that are center tapped and have cold-temperature open-circuit voltages of ±325 volts and above. The system voltage of 650 volts or greater exceeds the insulation rating of the commonly available 600-volt insulated conductors. Each disconnect and overcurrent device and the insulation of the wiring **must** have a voltage rating exceeding the system voltage rating. Type G and W cables are available with the higher voltage ratings, but are flexible cords and do not meet *NEC* requirements for fixed installations. Cables suitable for *NEC* installations requiring insulation greater than 600 volts are available (Appendix A).

Other older inverters have been designed to operate on systems with open-circuit voltages exceeding ±540 volts requiring conductors with 2000-volt or higher insulation. See Appendix D for a full discussion of this area.

OVERCURRENT DEVICES

When UL tests and lists fuses for dc operation, the voltage rating is frequently one-half the ac voltage rating. This results in a 600-volt ac fuse rated for 300-volt dc. Finding fuses with high enough dc ratings for grid systems operating at ±300 volts (600-volt system voltage) and above will pose problems. There are a limited number of listed, dc-rated 600-volt fuses available. See Appendix A.

Although not UL-Listed, Heinemann Electric Company (Appendix A) can series connect poles of dc-rated circuit breakers to obtain 750-volt ratings. Square D and others have similar products.

Circuit breakers that are “back fed” for any application (but particularly for utility interactive inverter connection to the grid) **must** be identified (in the listing) for such use and **must** be fastened in place with a screw or other additional clamp [690-64b(5), 384-16(f)].

DISCONNECTS

In addition to the Heinemann circuit breaker mentioned above, manufacturers such as GE, Siemens, and Square D may certify their switches for higher voltage when the poles are connected in series.

BLOCKING DIODES

Blocking diodes are not required by the *NEC* and their use is rapidly declining.

Blocking diodes are not overcurrent devices. They block reverse currents in direct-current circuits and help to control circulating ground-fault currents if used in both ends of high-voltage strings. Lightning induced surges are tough on diodes. If isolated case diodes are used, at least 3500 volts of insulation is provided between the active elements and the normally grounded heat sink. Choosing a peak reverse voltage as high as is available but at least twice the PV open-circuit voltage, will result in longer diode life. Substantial amounts of surge suppression will also improve diode longevity.

Blocking diodes may not be substituted for the UL-*1703* requirement for module protective fuses in each series-connected string of modules.

SURGE SUPPRESSION

Surge suppression is covered only lightly in the *NEC* because it affects performance more than safety and is mainly a utility problem at the transmission line level in ac systems [280]. PV arrays mounted in the open, on the tops of buildings, act like lightning rods. The PV designer and installer should provide appropriate means to deal with lightning-induced surges coming into the system.

Array frame grounding conductors should be routed directly to supplemental ground rods located as near as possible to the arrays.

Metal conduit will add inductance to the array-to-building conductors and slow down any induced surges as well as provide some electromagnetic shielding.

Metal oxide varistors (MOV) commonly used as surge suppression devices on electronic equipment have several deficiencies. They draw a small amount of current continually. The clamping voltage lowers as they age and may reach the open-circuit voltage of the system. When they fail, they fail in the shorted mode, heat up, and frequently catch fire. In many installations, the MOVs are protected with fast acting fuses to prevent further damage when they fail, but this may limit their effectiveness as surge suppression devices. Other electronic devices are available that do not have these problems.

Silicon Oxide surge arrestors do not draw current when they are off. They fail open circuited when overloaded and, while they may split open on overloads, they rarely catch fire. They are not normally protected by fuses and are rated for surge currents up to 100,000 amps. They are rated at voltages of 100 volts and higher and are available from electrical supply houses or Delta Lightning Arrestors, Inc. (Appendix A).

Several companies specialize in lightning protection equipment, but much of it is for ac systems. Electronic product directories, such as the *Electronic Engineers Master Catalog* should be consulted.

APPENDIX D

Cable and Device Ratings at High Voltages

There is a concern in designing PV systems that have system open-circuit voltages above 600 volts. The concern has two main issues—device ratings and *NEC* limitations.

EQUIPMENT RATINGS

Some utility-intertie inverters operate with a grounded, bipolar (three-wire) PV array. In a bipolar PV system, where each of the monopoles is operated in the 220-235-volt peak-power range, the open-circuit voltage can be anywhere from 290 to 380 volts, and above, depending on the module characteristics such as fill factor. Such a bipolar system can be described as a 350/700-volt system (for example) in the same manner that a 120/240-volt ac system is described. This method of describing the system voltage is consistent throughout the electrical codes used not only in residential and commercial power systems, but also in utility practice.

In all systems, the voltage ratings of the cable, switchgear, and overcurrent devices are based on the higher number of the pair (i.e., 700 volts in a 350/700-volt system). That is why 250-volt switchgear and overcurrent devices are used in 120/240-volt ac systems and 600-volt switchgear is used in systems such as the 277/480-volt ac system. Note that it is not the voltage to ground, but the higher line-to-line voltage that defines the equipment voltage requirements.

The *National Electrical Code* (*NEC*) defines a nominal voltage for ac systems (120, 240, etc.) and acknowledges that some variation can be expected around that nominal voltage. Such a variation around a nominal voltage is not considered in dc PV systems, and the *NEC* requires that a temperature-related connection factor on the open-circuit array voltage **must** be used. The open-circuit voltage is defined at Standard Test Conditions (STC) because of the relationship between the UL Standards and the way the *NEC* is written. The *NEC* Handbook elaborates on the definition of “circuit voltage,” but this definition may not apply to current-limited dc systems. Section 690-7(a) of the *NEC* requires that the voltage used for establishing dc circuit requirements in PV systems be the computed open-circuit voltage for crystalline PV technologies. In new thin-film PV technologies, open-circuit voltages are determined from manufacturers’ specifications for temperature coefficients.

The 1999 *NEC* specifically defines the PV system voltage as the product of a temperature-dependent factor (that may reach 1.25 at –40°C) and the STC open-circuit voltage [690-7]. The systems voltage is also defined as the highest voltage between any two wires in a 3-wire (bipolar) PV system [690-2].

The comparison to ac systems can be carried too far; there are differences. For example, the typical wall switch in a 120/240-volt ac residential or commercial system is rated at only 120 volts, but such a switch in a 120/240-volt dc PV system would have to be rated at 240 volts. The inherent differences between a dc current source (PV modules) and a voltage source (ac grid) bear on this issue. Even the definitions of circuit voltage in the *NEC* and *NEC* Handbook refer to ac and dc systems, but do not take into account the design of the balance of systems required in current-limited PV systems. In a PV system, all wiring, disconnects, and overcurrent devices have current ratings that exceed the short-circuit currents by at least 25%. In the case of bolted faults or ground faults involving currents from the PV array, the overcurrent devices do not trip because they are rated to withstand continuous operation at levels above the fault levels. In an ac system, bolted faults and ground faults generally cause the overcurrent devices to trip or blow removing the source of voltage from the fault. Therefore, the faults that pose high-voltage problems in PV, dc systems cause the voltage to be removed in ac, grid-supply systems. For these reasons, a switch rated at 120 volts can be used in an ac system with voltages up to 240 volts, but in a dc, PV system, the switch would have to be rated at 240 volts.

Another consideration that we are dealing with is the analogy of dc supply circuit and ac load circuits. An analysis of ac supply circuits would be similar to dc supply circuits.

*Underwriters Laboratories (*UL*) Standard 1703* requires that manufacturers of modules listed to the standard include, in the installation instructions, a statement that the open-circuit voltage should be multiplied by 125% (crystalline cells), further increasing the voltage requirement of the Balance of Systems (BOS) equipment. This requirement is now in the 1999 *NEC* Section 690-7 as a temperature-dependent constant.

Current PV modules that are listed to the UL *Standard 1703* are listed with a maximum system voltage of 600 volts. Engineers caution all installers, factory and otherwise, to not exceed this voltage. This restriction is not modified by the fact that the modules undergo high-pot tests at higher voltages. UL *Standard 1703* allows modules to be listed up to 1000 volts.

Although not explicitly stated by the *NEC*, it is evident that the intent of the Code and the UL Standards is that all cable, switches, fuses, circuit breakers, and modules in a PV system be rated for the maximum system voltage. This is clarified in the 1999 *NEC* [690-7(a)].

While reducing the potential for line-to-line faults, the practice of wiring each monopole (one of two electrical source circuits) in a separate conduit to the inverter does not eliminate the problem. Consider the bipolar system presented in Figure D-1 with a bolted fault (or deliberate short) from the negative to the

positive array conductor at the input of the inverter. With the switches closed, array short-circuit current flows, and neither fuse opens.

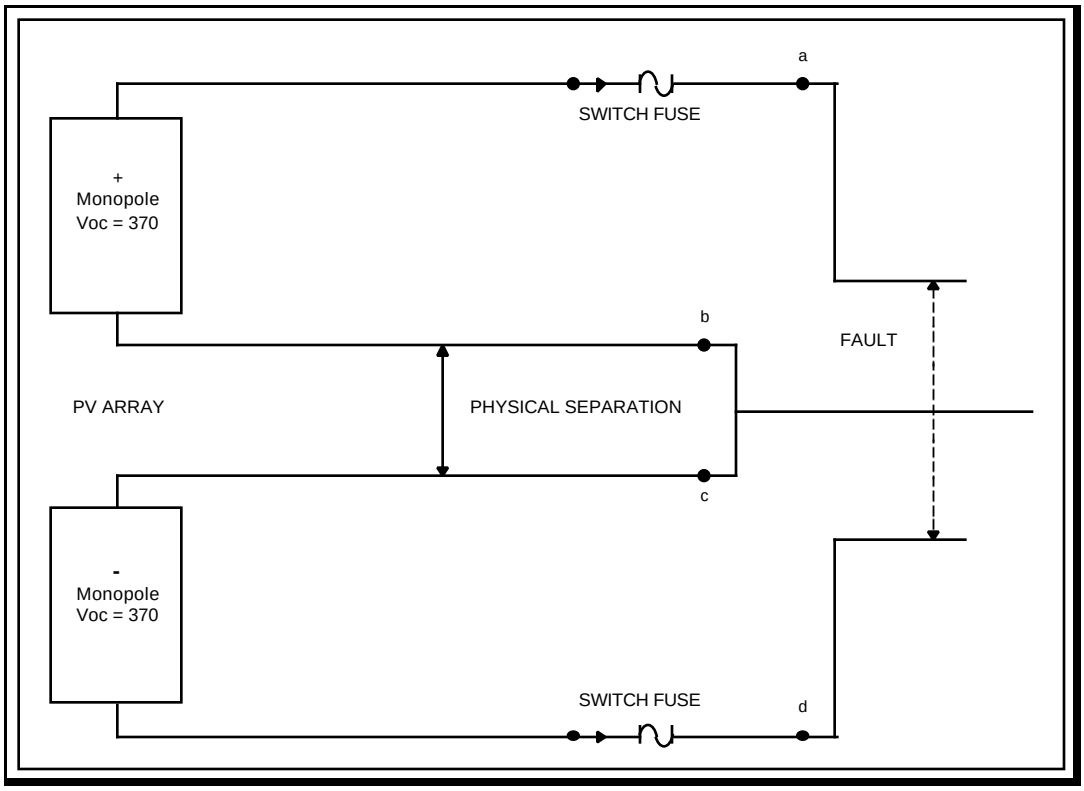

Figure D-1. Typical Bipolar System with Fault

Now consider what happens in any of the following cases.

1. A switch is opened
2. A fuse opens
3. A wire comes loose in a module junction box
4. An intercell connection opens or develops high resistance
5. A conductor fails at any point

In any of these cases, the entire array voltage (740 volts) stresses the device where the circuit opens. This voltage (somewhere between zero at short-circuit and the array open-circuit voltage) will appear at the device or cable. As the device starts to fail, the current through it goes from Isc to zero as the voltage across the device goes from zero to Voc. This process is very conducive to sustained arcs and heating damage.

Separating the monopoles does not avoid the high-voltage stress on any component, but it does help to minimize the potential for some faults. There are other possibilities for faults that will also place the same total voltage on various components in the system. An improperly installed grounding conductor coupled with a module ground fault could result in similar problems.

Section 690-5 of the *NEC* requires a ground-fault device on PV systems that are installed on the roofs of dwellings. This device, used for fire protection, **must** detect the fault, interrupt the fault current, indicate the fault, and disconnect the array.

Some large (100 kW) grid-connected PV systems like the one at Juana Diaz, Puerto Rico have inverters that, when shut down, crowbar the array. The array remains crowbarred until the ac power is shut off and creates a similar fault to the one pictured in Figure D-1.

NEC VOLTAGE LIMITATION

The second issue associated with this concern is that the *NEC* in Section 690-7(c) only allows PV installations up to 600 volts in one and two-family dwellings. Inverter and system design issues may favor higher system voltage levels.

VOLTAGE REMEDIES

System designers can select inverters with lower operating and open-circuit voltages. Utility-intertie inverters are available with voltages as low as 24 volts. The system designer also can work with the manufacturers of higher voltage inverters to reduce the number of modules in each series string to the point where the cold-temperature open-circuit voltage is less than 600 volts. The peak-power voltage would also be lowered. Transformers may be needed to raise the ac voltage to the required level. At least one inverter manufacturer has pursued this option and is offering inverters which can operate with arrays that have open-circuit voltages of less than 600 volts.

Cable manufacturers produce UL-Listed, cross-linked polyethylene, single-conductor cable. It is marked USE-2/RHW-2, Sunlight Resistant and is rated at 2000 volts. This cable could be used for module interconnections in conduit after all of the other *NEC* requirements are met for installations above 600 volts.

Several manufacturers issue factory certified rating on their three-pole disconnects to allow higher voltage, non-load break operation with series-connected poles. The *NEC* will require an acceptable method of obtaining non-load break operation.

Some OEM circuit breaker manufacturers will factory certify series-connected poles on their circuit breakers. Units have been used at 750 volts and 100 amps with 10,000 amps of interrupt rating. Higher voltages may be available.

High-voltage industrial fuses are available, but dc ratings are unknown at this time.

Individual 600-volt terminal blocks can be used with the proper spacing for higher voltages.

Module manufacturers can have their modules listed for higher system voltages. Most are currently limited to 600 volts.

Power diodes may be connected across each monopole. When a bolted line-to-line fault occurs, one of the diodes will be forward biased when a switch or fuse opens, thereby preventing the voltage from one monopole from adding to that of the other monopole. The diodes are mounted across points a-b and c-d in Figure D-1. Each diode should be rated for at least the system open-circuit voltage and the full short-circuit current from one monopole. Since diodes are not listed as over-voltage protection devices, this solution is not recognized in the *NEC.*

The *NEC* allows PV installations over 600 volts in non-residential applications, which will cover the voltage range being used in most current designs.

It should be noted that there are numerous requirements throughout the *NEC* that apply specifically to installations over 600 volts:

- All equipment **must** be listed for the maximum voltage.
- Clearance distances and mechanisms for achieving that clearance are significantly more stringent as voltages increase above 600 volts.

APPENDIX E

Example Systems

The systems described in this appendix and the calculations shown are presented as examples only. The calculations for conductor sizes and the ratings of overcurrent devices are based on the requirements of the 1999 *National Electrical Code* (*NEC*) and on UL *Standard 1703* which provides instructions for the installation of UL-Listed PV modules. Local codes and site-specific variations in irradiance, temperature, and module mounting, as well as other installation particularities, dictate that these examples should not be used without further refinement. Tables 310-16 and 310-17 from the *NEC* provide the ampacity data and temperature derating factors.

CABLE SIZING AND OVERCURRENT PROTECTION

The procedure presented below for cable sizing and overcurrent protection of that cable is based on *NEC* requirements in Sections 690-9, 690-8, 210-20(a), 215-2, 215-3, 220-10, 240-3(b), and 240-6(a).

1. **Circuit Current.** For circuits carrying currents from PV modules, multiply the short-circuit current by 125% and use this value for all further calculations. For PV circuits in the following examples, this is called the PV 125% calculation. In the 1999 *NEC*, this requirement has been included in Section 690-8, but may also remain in UL 1703. Do not apply this multiplier twice. For dc and ac inverter circuits in PV systems, use the rated continuous currents. AC and dc load circuits should follow the requirements of Sections 210, 220, and 215.

2. **Overcurrent Device Rating.** The overcurrent device **must** be rated at 125% of the current determined in Step 1. This is to prevent overcurrent devices from being operated at more than 80% of rating. This calculation, in the following examples, is called the *NEC* 125%.

3. **Cable Sizing.** Cables **shall** have a 30°C ampacity of 125% of the current determined in Step 1 to ensure proper operation of connected overcurrent devices. There are no additional deratings applied with this calculation.

4. **Cable Derating**. Based on the determination of Step 3 and the location of the cable (raceway or free-air), a cable size and insulation temperature rating (60, 75, or 90°C) are selected from the *NEC* Ampacity Tables 310-16 or 310-17. Use the 75°C cable ampacities to get the size, then use the ampacity from the 90°C column—if needed—for the deratings. This cable is then derated for temperature, conduit fill, and other requirements. The resulting derated ampacity **must** be greater than the value found in Step 1. If not greater, then a larger cable size or higher insulation temperature

must be selected. The current in Step 3 is not used at this point to preclude oversizing the cables.

5. **Ampacity vs. Overcurrent Device.** The derated ampacity of the cable selected in Step 4, **must** be equal to or greater than the overcurrent device rating determined in Step 2. If the derated ampacity of the cable is less than the rating of the overcurrent device, then a larger cable **must** be selected. The next larger standard size overcurrent device may be used if the derated cable ampacity falls between the standard overcurrent device sizes found in *NEC* Section 240-6.

Note: This step may result in a larger conductor size than that determined in Step 4.

6. **Device Terminal Compatibility.** Since most overcurrent devices have terminals rated for use with 75°C (or 60°C) cables, compatibility **must** be verified. If a 90°C-insulated cable was selected in the above process, the 30°C ampacity of the same size cable with a 75°C (or 60°C) insulation **must** be greater than or equal to the current found in Step 1. This ensures that the cable will operate at temperatures below the temperature rating of the terminals of the overcurrent device. If the overcurrent device is located in an area with ambient temperature higher than 30°C, then the 75°C (or 60°C) ampacity **must** also be derated.

Here is an example of how the procedure is used:

The task is to size and protect two PV source circuits in conduit, each with an Isc = 40 amps. Four current-carrying conductors are in the conduit and are operating in a 45°C ambient temperature.

Step 1: 1.25 x 40 = 50 amps. (PV 125%)

Step 2: The required fuse (with 75°C terminals) is 1.25 x 50 = 62.5 amps. The next standard fuse size is 70 amps. (*NEC* 125%)

Step 3: Same calculation as Step 2. Cable ampacity without deratings must be 62.5 amps.

Step 4: From Table 310-16, cables with 75°C insulation: A 6 AWG conductor at 65 amps is needed. This meets Step 3 requirements. Plan on installing a 6 AWG XHHW-2 cable with 90°C insulation and a 30°C ampacity of 75 amps. Conduit fill derate is 0.8 and temperature derate is 0.87. Derated ampacity is 52.2 amps (75 x 0.8 x 0.87). This is greater than the required 50 amps in Step 1 and meets the requirement.

Step 5: It is acceptable to protect a cable with a derated ampacity of 52.2 amps with a 60-amp overcurrent device since this is the next larger standard size. However, this circuit requires at least a 62.5 amp device (Step 2). Therefore, the conductor **must** be increased to a 4 AWG conductor with a derated ampacity of 66 amps (95 x 0.87 x 0.8). A 70-amp fuse is acceptable to protect this cable since it is the next larger standard size.

Step 6. The ampacity of a 4 AWG cable with 75°C insulation (because the fuse has 75°C terminals) operating at 45°C is 70 amps (85 x .82), and is higher than the calculated circuit current of 50 amps found in Step 1. Using the 75°C column in Table 310-16 or 310-17 for starting Step 4 usually ensures that this check will be passed.

EXAMPLE 1 Direct-Connected Water Pumping System

Array Size: 4, 12-volt, 60-watt modules Isc = 3.8 amps, Voc = 21.1 volts
Load: 12-volt, 10-amp motor

Description

The modules are mounted on a tracker and connected in parallel. The modules are wired as shown in Figure E-1 with 10 AWG USE-2 single-conductor cable. A large loop is placed in the cable to allow for tracker motion without straining the rather stiff building cable. The USE-2 cable is run to a disconnect switch in an enclosure mounted on the pole. From this disconnect enclosure, 8 AWG XHHW-2 cable in electrical nonmetallic conduit is routed to the well head. The conduit is buried 18 inches deep. The 8 AWG cable is used to minimize voltage drop.

The *NEC* requires the disconnect switch. Because the PV modules are current limited and all conductors have an ampacity greater than the maximum output of the PV modules, no overcurrent device is required, although some inspectors might require it and it might serve to provide some degree of lightning protection. A dc-rated disconnect switch or a dc-rated fused disconnect **must** be used. Since the system is ungrounded, a two-pole switch **must** be used. All module frames, the disconnect enclosure, and the pump housing **must** be grounded, whether the system is grounded or not.

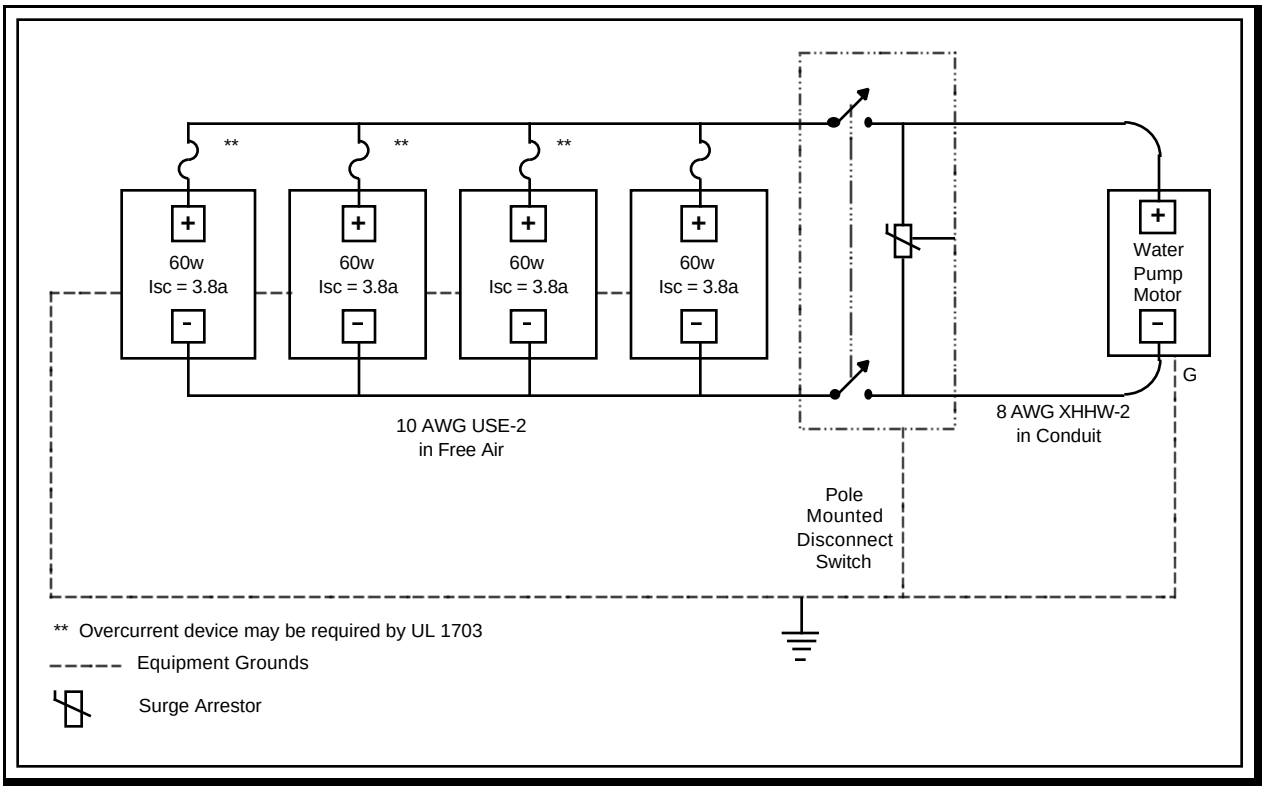

Figure E-1. Direct Connected System

Calculations

The array short-circuit current is 15.2 amps (4 x 3.8).

PV 125%: 1.25 x 15.2 = 19 amps (Step 1)

No fuse, no Step 2

NEC 125%: 1.25 x 19 = 23.75 amps (Step 3)

The ampacity of 10 AWG USE-2 at 30°C is 55 amps.

The ampacity at 61-70°C is 31.9 amps (0.58 x 55) which is more than the 19 amp requirement. (Step 4)

The equipment grounding conductors should be 10 AWG.

The minimum voltage rating of all components is 26 volts (1.25 x 21.1).

EXAMPLE 2 Water Pumping System with Current Booster

Array Size: 10, 12-volt, 53-watt modules Isc = 3.4 amps, Voc = 21.7 volts
Current Booster Output: 90 amps
Load: 12-volt, 40-amp motor

Description

This system has a current booster before the water pump and has more modules than in Example 1. Initially, 8 AWG USE-2 cable was chosen for the array connections, but a smaller cable was chosen to attach to the module terminals. As the calculations below show, the array was split into two subarrays. There is potential for malfunction in the current booster, but it does not seem possible that excess current can be fed back into the array wiring, since there is no other source of energy in the system. Therefore, these conductors do not need overcurrent devices if they are sized for the entire array current. If smaller conductors are used, then overcurrent devices will be needed.

Since the array is broken into two subarrays, the maximum short-circuit current available in either subarray wiring is equal to the subarray short-circuit current under fault conditions. Overcurrent devices are needed to protect the subarray conductors under these conditions.

A grounded system is selected, and only one-pole disconnects are required. Equipment grounding and system grounding conductors are shown in Figure E-2

If the current booster output conductors are sized to carry the maximum current (3-hour) of the booster, then overcurrent devices are not necessary, but again, some inspectors may require them.

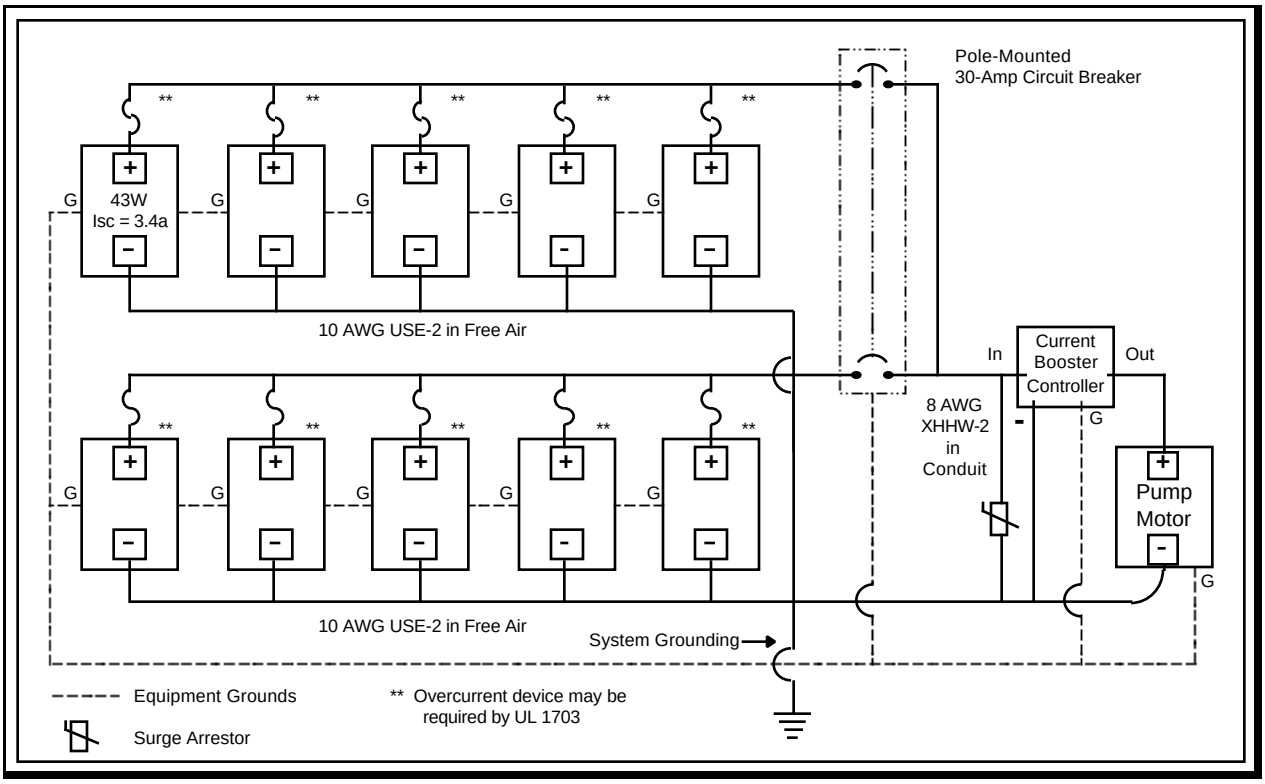

Figure E-2. Direct-Connected PV System with Current Booster

Calculations

The array short-circuit current is 34 amps (10 x 3.4).

PV 125%: 1.25 x 34 = 42.5 amps

NEC 125%: 1.25 x 42.5 = 53.1 amps

The ampacity of 8 AWG USE-2 cable at 30°C in free air is 80 amps.

The ampacity at 61-70°C is 46.4 amps (0.58 x 80), which is more than the 42.5 amp requirement, and a single array could be used. However, the array is split into two subarrays for serviceability. Each is wired with 10 AWG USE-2 conductors.

The subarray short-circuit current is 17 amps (5 x 3.4).
PV 125%: 1.25 x 17 = 21.3 amps
NEC 125%: 1.25 x 21.25 = 26.6 amps
The ampacity of 10 AWG USE-2 at 30°C in free air is 55 amps.

The ampacity at 61-70°C is 31.9 amps (0.58 x 55), which is more than the 21.3 amp requirement. Since this cable is to be connected to an overcurrent device with terminals rated at 60°C or 75°C, the ampacity of the cable **must** be evaluated with 60°C or 75°C insulation. Overcurrent devices rated at 100 amps or less may have terminals rated at only 60°C. The ampacity of 10 AWG 75°C cable operating at 30°C is 35 amps, which is more than the 21.3 amps requirement. Therefore, there are no problems with the terminals on a 75°C overcurrent device.

Thirty-amp circuit breakers are used to protect the 10 AWG subarray conductors. The required rating is 1.25 x 21.25 = 26.6 amps, and the next largest size is 30 amps.

The current booster maximum current is 90 amps.
The current booster average long-term (3-hours or longer) current is 40 amps.
NEC 125%: 1.25 x 40 = 50 amps
The ampacity of 8 AWG XHHW-2 at 30°C in conduit is 55 amps.

The ampacity at 36-40°C is 50 amps (0.91 x 55), which meets the requirements but may not meet the overcurrent device connection requirements when used.

The 8 AWG conductors are connected to the output of the circuit breakers, and there is a possibility that heating of the breaker may occur. It is therefore good practice to make the calculation for terminal overheating. The ampacity of a 8 AWG conductor evaluated with 75°C insulation (the maximum temperature of the terminals on the overcurrent device) is 50 amps, which is greater than the 40-amp requirement. This means that the overcurrent device will not be subjected to overheating when the 8 AWG conductor carries 40 amps.

All equipment-grounding conductors should be 10 AWG. The grounding electrode conductor should be 8 AWG or larger.

Minimum voltage rating of all components: 1.25 x 21.7 = 27 volts

EXAMPLE 3 Stand-Alone Lighting System

Array Size: 4, 12-volt, 64-watt modules Isc = 4.0 amps, Voc = 21.3 volts

Batteries: 200-amp-hours at 24 volts

Load: 60 watts at 24 volts

Description

The modules are mounted at the top of a 20-foot pole with the metal-halide lamp. The modules are connected in series and parallel to achieve the 24-volt system rating. The lamp, with an electronic ballast and timer/controller, draws 60 watts at 24 volts. The batteries, disconnect switches, charge controller, and overcurrent devices are mounted in a box at the bottom of the pole. The system is grounded as shown in Figure E-3.

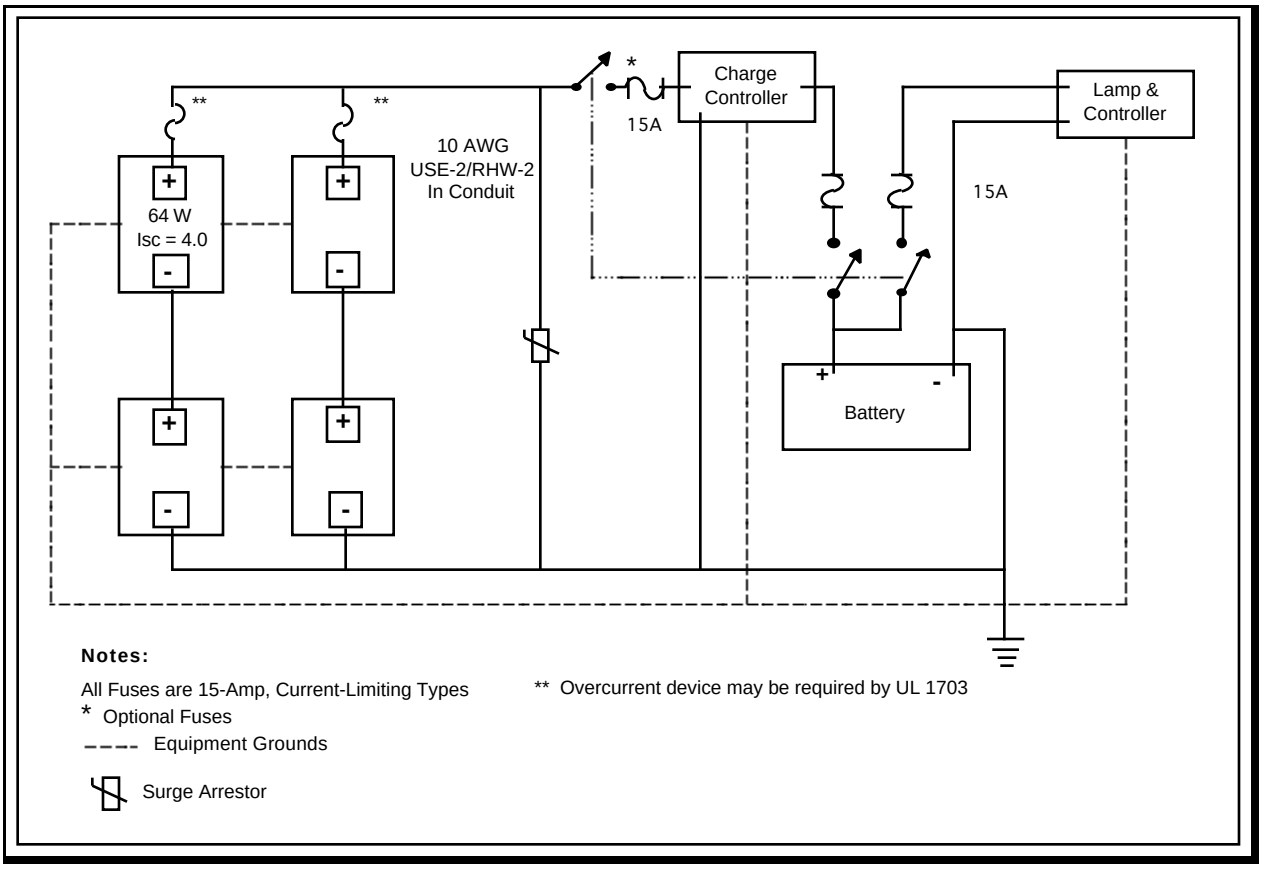

Figure E-3. Stand-Alone Lighting System

Calculations:

The array short-circuit current is 8 amps (2 x 4).

PV 125%: 1.25 x 8 = 10 amps

NEC 125%: 1.25 x 10 = 12.5 amps

Load Current: 60/24 = 2.5 amps

NEC 125%: 1.25 x 2.5 = 3.1 amps

Cable size 10 AWG USE-2/RHW-2 is selected for module interconnections and is placed in conduit at the modules and then run down the inside of the pole.

The modules operate at 61-70°C, which requires that the module cables be temperature derated. Cable 10 AWG USE-2/RHW-2 has an ampacity of 40 amps at 30°C in conduit. The derating factor is 0.58. The temperature derated ampacity is 23.2 amps (40 x 0.58), which exceeds the 10-amp requirement. Checking the cable with a 75°C insulation, the ampacity at the fuse end is 35 amps, which exceeds the 10-amp requirement. This cable can be protected by a 15-amp fuse or circuit breaker (125% of 10 is 12.5). An overcurrent device rated at 100 amps or less may only have terminals rated for 60°C, not the 75°C used in this example. Lower temperature calculations may be necessary.

The same USE-2/RHW-2, 10 AWG cable is selected for all other system wiring, because it has the necessary ampacity for each circuit.

A three-pole fused disconnect is selected to provide the PV and load disconnect functions and the necessary overcurrent protection. The fuse selected is a RK-5 type, providing current-limiting in the battery circuits. A pull-out fuse holder with either Class RK-5 or Class T fuses could also be used for a more compact installation. Fifteen amp fuses are selected to provide overcurrent protection for the 10 AWG cables. They are used in the load circuit and will not blow on any starting surges drawn by the lamp or controller. The 15-amp fuse before the charge controller could be eliminated since that circuit is protected by the fuse on the battery side of the charge controller. The disconnect switch at this location is required.

The equipment grounding conductors should be 10 AWG conductors. An 8 AWG conductor would be needed to for the ground rod.

The dc voltage ratings for all components used in this system should be at least 53 volts (2 x 21.3 x 1.25).

EXAMPLE 4 Remote Cabin DC-Only System

Array Size: 6, 12-volt, 75-watt modules Isc = 4.8 amps, Voc = 22 volts

Batteries: 700 amp hours at 12 volts

Load: 75 watts peak at 12-volts dc

Description

The modules are mounted on a rack on a hill behind the house. Nonmetallic conduit is used to run the cables from the module rack to the control panel. A disconnect and control panel are mounted on the back porch, and the batteries are in an insulated box under the porch. All the loads are dc with a peak combined power of 75 watts at 12 volts due, primarily, to a pressure pump on the gravity-fed water supply. The battery bank consists of four 350-amp-hour, 6-volt, deep-cycle batteries wired in series and parallel. Figure E-4 shows the system schematic.

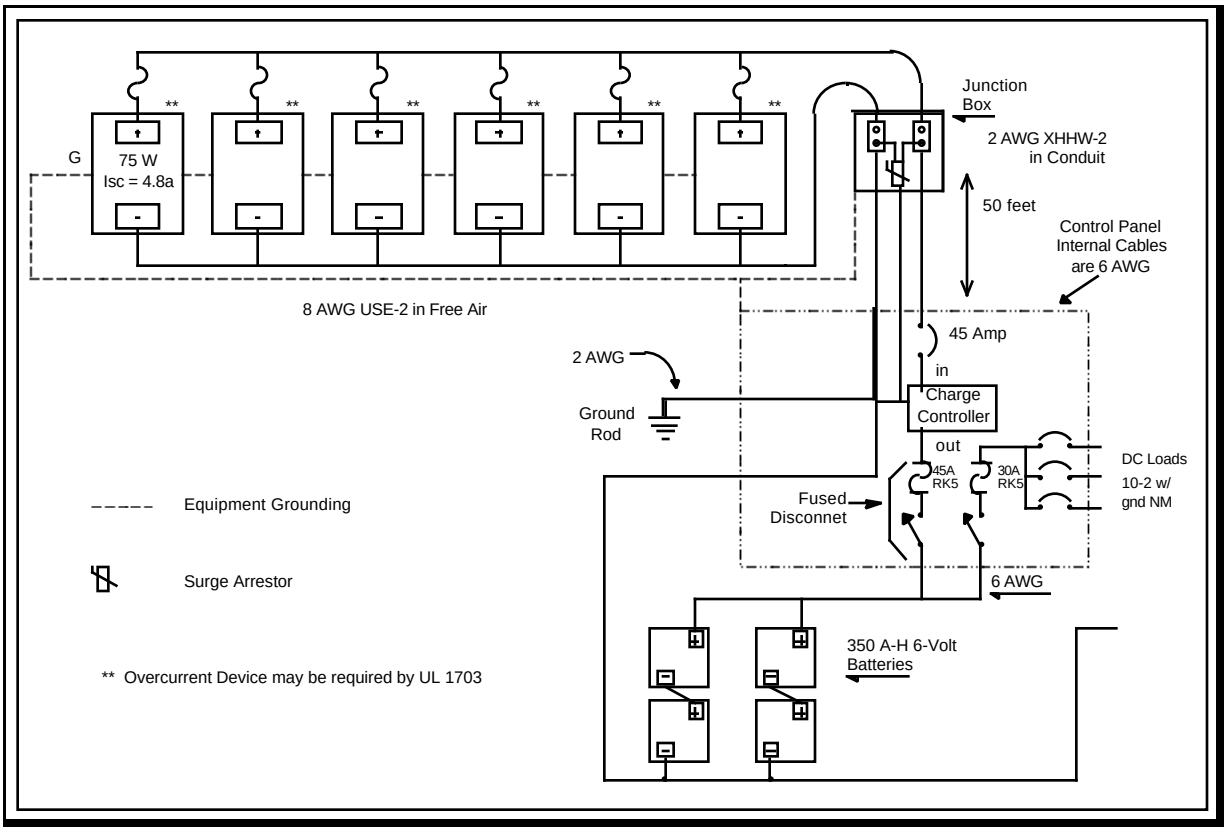

Figure E-4. Remote Cabin DC-Only System

Calculations

The array short-circuit current is 28.8 amps (6 x 4.8).

PV 125%: 1.25 x 28.8 = 36 amps

NEC 125%: 1.25 x 36.0 = 45 amps

The module interconnect wiring and the wiring to a rack-mounted junction box will operate at 65°C. If USE-2 cable with 90°C insulation is chosen, then the temperature derating factor will be 0.58. The required ampacity of the cable at 30°C is 62 amps (36/0.58), which can be handled by 8 AWG cable with an ampacity of 80 amps in free air at 30°C. Conversely, the ampacity of the 8 AWG cable is 46.4 amps (80 x 0.58) at 65°C which exceeds the 36 amp requirement.

From the rack-mounted junction box to the control panel, the conductors will be in conduit and exposed to 40°C temperatures. If XHHW-2 cable with a 90°C insulation is selected, the temperature derating factor is 0.91. The required ampacity of the cable at 30°C would be 36/0.91 = 39.6 amps in conduit. Cable size 8 AWG has an ampacity of 55 amps at 30°C in conduit. Conversely, the 8 AWG conductor has an ampacity of 50 amps (55 x 0.91) at 40°C in conduit which exceeds the 39.6 amp requirement at this temperature.

The 8 AWG cable, evaluated with a 75°C insulation, has an ampacity at 30°C of 50 amps, which is greater than the 36 amps that might flow through it on a daily basis.

The array is mounted 200 feet from the house, and the round trip cable length is 400 feet. A calculation of the voltage drop in 400 feet of 8 AWG cable operating at 36 amps (125% Isc) is 0.778 ohms per 1000 feet x 400 / 1000 x 36 = 11.2 volts. This represents an excessive voltage drop on a 12-volt system, and the batteries cannot be effectively charged. Conductor size 2 AWG (with a voltage drop of 2.8 volts) was substituted; this substitution is acceptable for this installation. The conductor resistances are taken from Table 8 in Chapter 9 of the *NEC* and are given for conductors at 75°C.

The PV conductors are protected with a 45-amp (1.25 x 36) single-pole circuit breaker on this grounded system. The circuit breaker should be rated to accept 2 AWG conductors rated at 75°C.

Cable size 6 AWG THHN cable is used in the control center and has an ampacity of 95 amps at 30°C when evaluated with 75°C insulation. Wire size 2 AWG from the negative dc input is used to the point where the grounding electrode conductor is attached instead of the 6 AWG conductor used elsewhere to comply with grounding requirements.

The 75-watt peak load draws about 6.25 amps and 10-2 with ground (w/gnd) nonmetallic sheathed cable was used to wire the cabin for the pump and a few lights. DC-rated circuit breakers rated at 20 amps were used to protect the load wiring, which is in excess of the peak load current of 7.8 amps (1.25 x 6.25) and less than the cable ampacity of 30 amps.

Current-limiting fuses in a fused disconnect are used to protect the dc-rated circuit breakers, which do not have an interrupt rating sufficient to withstand the short-circuit currents from the battery under fault conditions. RK-5 fuses were chosen with a 45-amp rating in the charge circuit and a 30-amp rating in the load circuit. The fused disconnect also provides a disconnect for the battery from the charge controller and the dc load center.

The equipment grounding conductors should be 10 AWG and the grounding electrode conductor should be 2 AWG.

All components should have a voltage rating of at least 1.25 x 22 = 27.5 volts.

EXAMPLE 5 Small Residential Stand-Alone System

Array Size: 10, 12-volt, 51-watt modules Isc = 3.25 amps, Voc = 20.7 volts
Batteries: 800 amp-hours at 12 volts
Loads: 5 amps dc and 500-watt inverter with 90% efficiency

Description

The PV modules are mounted on the roof. Single conductor cables are used to connect the modules to a roof-mounted junction box. UF two-conductor sheathed cable is used from the roof to the control center. Physical protection (wood barriers or conduit) for the UF cable is used where required. The control center, diagrammed in Figure E-5, contains disconnect and overcurrent devices for the PV array, the batteries, the inverter, and the charge-controller.

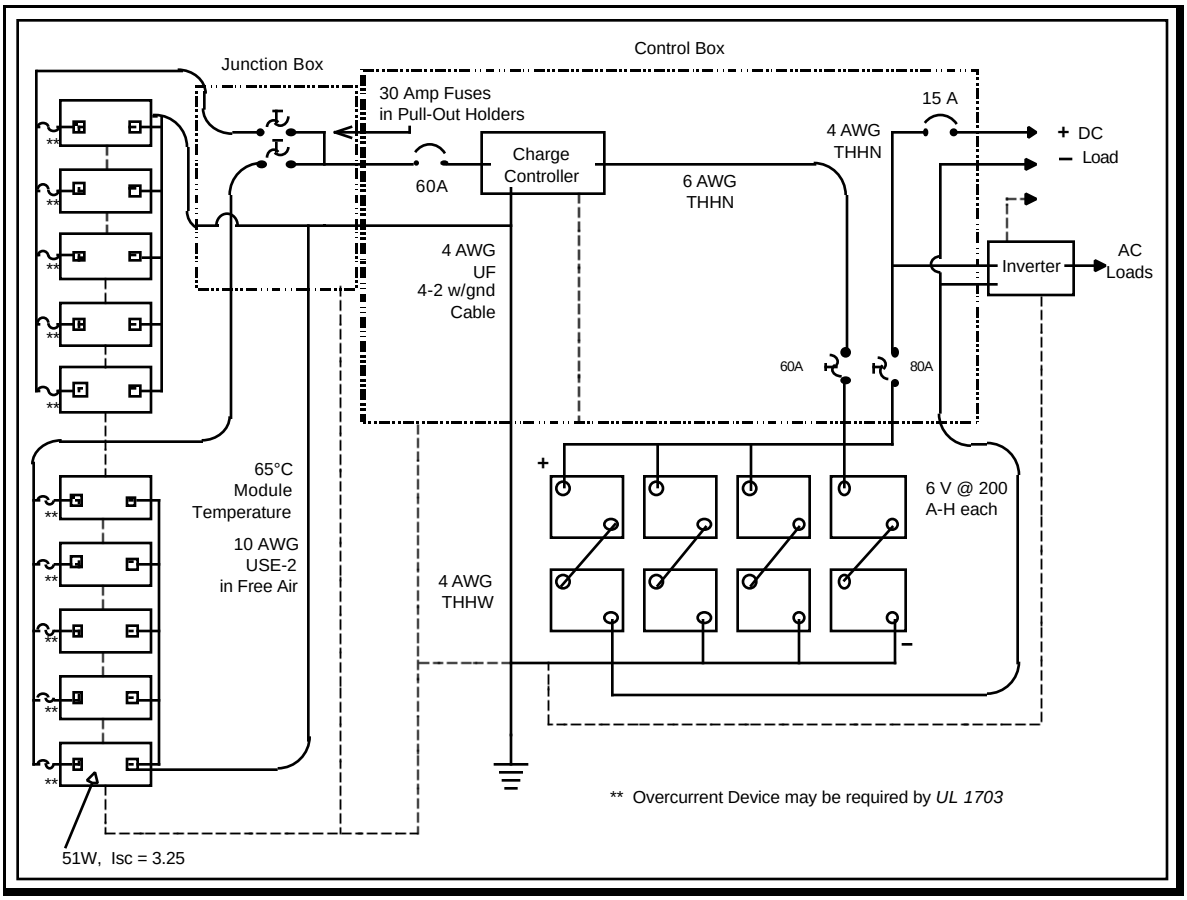

Figure E-5. Small Residential Stand-Alone System

Calculations

The module short-circuit current is 3.25 amps.

PV 125%: 1.25 x 3.25 = 4.06 amps

NEC 125%: 1.25 x 4.06 = 5.08 amps per module

The module operating temperature is 68°C.

The derating factor for USE-2 cable is 0.58 at 61-70°C.

Cable 14 AWG has an ampacity at 68°C of 20.3 amps (0.58 x 35) (max fuse is 15 amps—see notes at bottom of Tables 310-16 & 17).

Cable 12 AWG has an ampacity at 68°C of 23.2 amps (0.58 x 40) (max fuse is 20 amps).

Cable 10 AWG has an ampacity at 68°C of 31.9 amps (0.58 x 55) (max fuse is 30 amps).

Cable 8 AWG has an ampacity at 68°C of 46.4 amps (0.58 x 80).

The array is divided into two five-module subarrays. The modules in each subarray are wired from module junction box to module junction box and then to the array junction box. Cable size 10 AWG USE-2 is selected for this wiring, because it has an ampacity of 31.9 amps under these conditions, and the requirement for each subarray is 5 x 4.06 = 20.3 amps. Evaluated with 75°C insulation, a 10 AWG cable has an ampacity of 35 amps, which is greater than the actual requirement of 20.3 amps (5 x 4.06). In the array junction box on the roof, two 30-amp fuses in pull-out holders are used to provide overcurrent protection for the 10 AWG conductors. These fuses meet the requirement of 25.4 amps (125% of 20.3) and have a rating less than the derated cable ampacity.

In this junction box, the two subarrays are combined into an array output. The ampacity requirement is 40.6 amps (10 x 4.06). A 4 AWG UF cable (4-2 w/gnd) is selected for the run to the control box. It operates in an ambient temperature of 40°C and has an ampacity of 57.4 amps (70 x 0.82). This is a 60°C cable with 90°C conductors. Care **must** be used when connecting to fuses that are rated for use only with 75°C conductors.

A 60-amp circuit breaker in the control box serves as the PV disconnect switch and overcurrent protection for the UF cable. The *NEC* allows the next larger size; in this case, 60 amps, which is over the 57 amps ampacity of the cable. Two single-pole, pull-out fuse holders are used for the battery disconnect. The charge circuit fuse is a 60-amp RK-5 type.

The inverter has a continuous rating of 500 watts at the lowest operating voltage of 10.75 volts and an efficiency of 90% at this power level. The ampacity requirement of the input circuit is 64.6 amps ((500 / 10.75 / 0.90) x 1.25).

The cables from the battery to the control center **must** meet the inverter requirements of 64.6 amps plus the dc load requirements of 6.25 amps (1.25 x 5). A 4 AWG THHN has an ampacity of 85 amps when placed in conduit and evaluated with 75°C insulation. This exceeds the requirements of 71 amps (64.6 + 6.25). This cable can be used in the custom power center and be run from the batteries to the inverter.

The discharge-circuit fuse **must** be rated at least 71 amps. An 80-amp fuse should be used, which is less than the cable ampacity.

The dc-load circuit is wired with 10 AWG NM cable (ampacity of 30 amps) and protected with a 15-amp circuit breaker.

The grounding electrode conductor is 4 AWG and is sized to match the largest conductor in the system, which is the array-to-control center wiring.

Equipment grounding conductors for the array and the charge circuit can be 10 AWG based on the 60-amp overcurrent devices [Table 250-95]. The equipment ground for the inverter **must** be an 8 AWG conductor.

All components should have at least a dc voltage rating of 1.25 x 20.7 = 26 volts.

EXAMPLE 6 Medium Sized Residential Hybrid System

Array Size: 40, 12-volt, 53-watt modules Isc = 3.4 amps, Voc = 21.7 volts
Batteries: 1000 amp-hours at 24 volts
Generator: 6 kW, 240-volt ac
Loads: 15 amps dc and 4000-watt inverter, efficiency =.85

Description

The 40 modules (2120 watts STC rating) are mounted on the roof in subarrays consisting of eight modules mounted on a single-axis tracker. The eight modules are wired in series and parallel for this 24-volt system. Five source circuits are routed to a custom power center. Single-conductor cables are used from the modules to roof-mounted junction boxes for each source circuit. From the junction boxes, UF sheathed cable is run to the main power center.

Blocking diodes are not required or used to minimize voltage drops in the system.

A prototype array ground-fault detector provides experimental compliance with the requirements of *NEC* Section 690-5.

The charge controller is a relay type.

DC loads consist of a refrigerator, a freezer, several telephone devices, and two fluorescent lamps. The maximum combined current is 15 amps.

The 4000-watt sine-wave inverter supplies the rest of the house.

The 6-kW natural gas fueled, engine-driven generator provides back-up power and battery charging through the inverter. The 240-volt output of the generator is

fed through a 5 kVA transformer to step it down to 120 volts for use in the inverter and the house. The transformer is protected on the primary winding by a 30-amp circuit breaker [450-3(b)(1) Ex-1]. Figure E-6 presents the details.

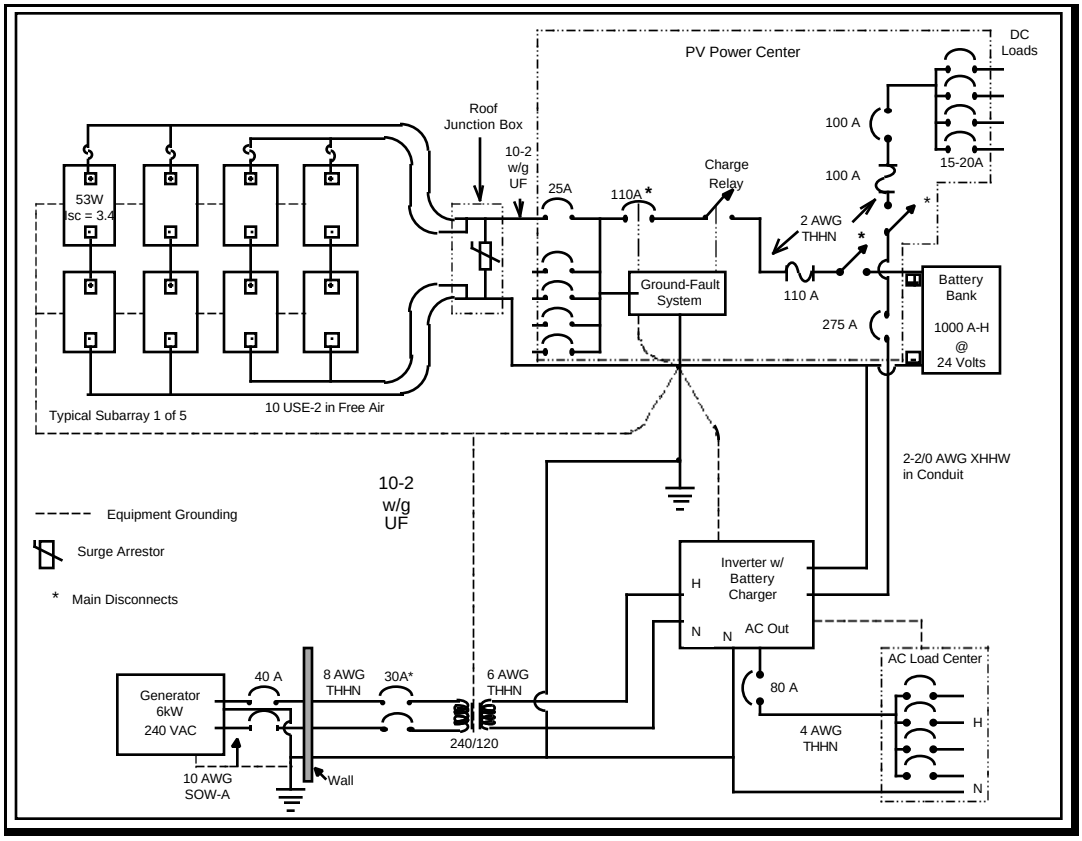

Figure E-6. Medium Sized Residential Hybrid System

Calculations

The subarray short-circuit current is 13.6 amps (4 x 3.4).

PV 125%: 1.25 x 13.6 = 17 amps

NEC 125%: 1.25 x 17 = 21.25 amps

The temperature derating factor for USE-2 cable at 61-70°C is 0.58.

The ampacity of 10 AWG USE-2 cable at 70°C is 31.9 amps (55 x 0.58).

The temperature derating factor for UF cable at 36-40°C is 0.82.

The ampacity of 10-2 w/gnd UF cable at 40°C is 24.6 amps (30 x 0.82). Since the UF cable insulation is rated at 60°C, no further temperature calculations are required when this cable is connected to circuit breakers rated for use with 60 or 75°C conductors.

The source-circuit circuit breakers are rated at 25 amps (requirement is 125% of 17 amps = 21.25).

The PV array short-circuit current is 68 amps (5 x 13.6).

PV 125%: 1.25 x 68 = 85 amps

NEC 125%: 1.25 x 85 = 106 amps

A 110-amp circuit breaker is used for the main PV disconnect after the five source circuits are combined.

A 110-amp RK5 current-limiting fuse is used in the charge circuit of the power center, which is wired with 2 AWG THHN conductors (170 amps with 75°C insulation).

The dc-load circuits are wired with 10-2 w/gnd NM cable (30 amps) and are protected with 20- or 30-amp circuit breakers. A 100-amp RK-5 fuse protects these discharge circuits from excess current from the batteries.

Inverter

The inverter can produce 4000 watts ac at 22 volts with an efficiency of 85%.

The inverter input current ampacity requirements are 267 amps ((4000 / 22 / 0.85) x 1.25). See Appendix F for more details.

Two 2/0 AWG USE-2 cables are paralleled in conduit between the inverter and the batteries. The ampacity of this cable (rated with 75°C insulation) at 30°C is 280 amps (175 x 2 x 0.80). The 0.80 derating factor is required because there are four current-carrying cables in the conduit.

A 275-amp circuit breaker with a 25,000-amp interrupt rating is used between the battery and the inverter. Current-limiting fusing is not required in this circuit.

The output of the inverter can deliver 4000 watts ac (33 amps) in the inverting mode. It can also pass up to 60 amps through the inverter from the generator while in the battery charging mode.

Ampacity requirements, ac output: 60 x 1.25 = 75 amps. This reflects the *NEC* requirement that circuits are not to be operated continuously at more than 80% of rating.

The inverter is connected to the ac load center with 4 AWG THHN conductors in conduit, which have an ampacity of 85 amps when used at 30°C with 75°C overcurrent devices. An 80-amp circuit breaker is used near the inverter to provide a disconnect function and the overcurrent protection for this cable.

Generator
The 6-kW, 120/240-volt generator has internal circuit breakers rated at 27 amps (6500-watt peak rating). The *NEC* requires that the output conductors between the generator and the first field-installed overcurrent device be rated at least 115% of the nameplate rating ((6000 / 240) x 1.15 = 28.75 amps). Since the generator is connected through a receptacle outlet, a 10-4 AWG SOW-A portable cord (30 amps) is run to a NEMA 3R exterior circuit breaker housing. This circuit breaker is rated at 40 amps and provides overcurrent protection for the 8 AWG THHN conductors to the transformer. These conductors have an ampacity of 44 amps (50 x 0.88) at 40°C (75°C insulation rating). The circuit breaker also provides an exterior disconnect for the generator. Since the transformer isolates the generator conductors from the system electrical ground, the neutral of the generator is grounded at the exterior disconnect.

A 30-amp circuit breaker is mounted near the PV Power Center in the ac line between the generator and the transformer. This circuit breaker serves as the interior ac disconnect for the generator and is grouped with the other disconnects in the system.

The output of the transformer is 120 volts. Using the rating of the generator, the ampacity of this cable **must** be 62.5 amps ((6000 / 120) x 1.25). A 6 AWG THHN conductor was used, which has an ampacity of 65 amps at 30°C (75°C insulation rating).

Grounding
The module and dc-load equipment grounds **must** be 10 AWG conductors. Additional lightning protection will be afforded if a 6 AWG or larger conductor is run from the array frames to ground. The inverter equipment ground **must** be a 4 AWG conductor based on the size of the overcurrent device for this circuit. The grounding electrode conductor **must** be 2-2/0 AWG or a 500 kcmil conductor, unless there are no other conductors connected to the grounding electrode; then this conductor may be reduced to 6 AWG [250-122 Exceptions].

DC Voltage Rating
All dc circuits should have a voltage rating of at least 55 volts (1.25 x 2 x 22).

EXAMPLE 7 Roof-Top Grid-Connected System

Array Size: 24, 50-volt, 240-watt modules
Isc = 5.6
Voc = 62

Inverter: 200-volt nominal dc input
240-volt ac output at 5000 watts with an efficiency of 0.95.

Description

The roof-top array consists of six parallel-connected strings of four modules each. A junction box is mounted at the end of each string which contains a surge arrestor, a blocking diode, and a fuse. All wiring is RHW-2 in conduit. The inverter is located adjacent to the service entrance load center where PV power is fed to the grid through a back-fed circuit breaker. Figure E-7 shows the system diagram.

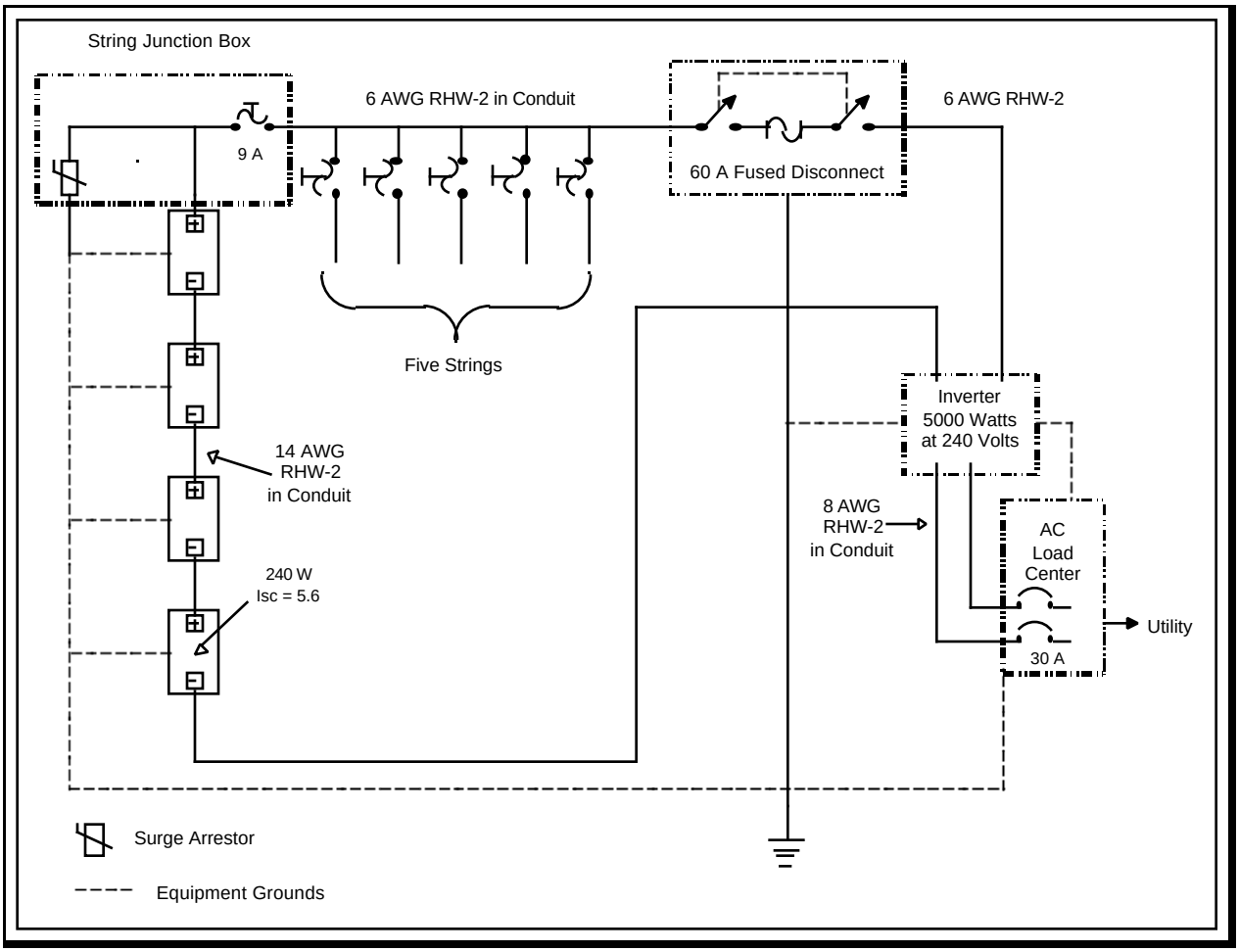

Figure E-7. Roof-Top Grid-Connected System

Calculations

The string short-circuit current is 5.6 amps.

PV 125%: 1.25 x 5.6 = 7 amps

NEC 125%: 1.27 x 7 = 8.75 amps

The array short-circuit current is 33.6 amps (6 x 5.6).

PV 125%: 1.25 x 33.6 = 42 amps

NEC 125%: 1.25 x 42 = 52.5 amps

The modules in each string are connected in series. The conductors operate at 63°C. The temperature derating factor for RHW-2 at this temperature is 0.58. The required 30°C ampacity for this cable is 15 amps (8.75 / 0.58). RHW-2 14 AWG cable has an ampacity of 25 amps with 90°C insulation and 20 amps with 75°C insulation so there is no problem with the end of the cable connected to the fuse since the 7 amps is below either ampacity.

This cable is protected with a 9-amp fuse.

The cable from the string J-Boxes to the main PV disconnect operates at 40°C. The temperature derating factor for RHW-2 with 90°C insulation is 0.91. This yields a 30°C ampacity requirement of 58 amps (52.5 / 0.91). RHW-2 6 AWG meets this requirement with an ampacity of 75 amps (90°C insulation), and a number 6 AWG cable with 75°C insulation has an ampacity of 65 amps, which also exceeds the 42 amp requirement.

Overcurrent protection is provided with a 60-amp fused disconnect. Since the negative dc conductor of the array is grounded, only a single-pole disconnect is needed.

The inverter output current is 21 amps (5000 / 240).

NEC 125%: 1.25 x 21 = 26 amps.

The cable from the inverter to the load center operates at 30°C. Cable size 8 AWG RHW-2 (evaluated with 75°C insulation) has an ampacity of 50 amps.

A back-fed 30-amp, two-pole circuit breaker provides an ac disconnect and overcurrent protection in the load center.

The equipment grounding conductors for this system should be at least 10 AWG conductors. The system grounding electrode conductor should be a 6 AWG conductor.

All dc circuits should have a voltage rating of at least 310 volts (1.25 x 4 x 62).

EXAMPLE 8 Integrated Roof Module System, Grid Connected

Array Size: 192, 12-volt, 22-watt thin-film modules
Isc = 1.8 amps
Vmp = 15.6 volts
Voc = 22 volts

Inverter: ±180-volt dc input
120-volt ac output
4000 watts
95% efficiency

Description

The array is integrated into the roof as the roofing membrane. The modules are connected in center-tapped strings of 24 modules each. Eight strings are connected in parallel to form the array. A blocking diode (required by the manufacturer) is placed in series with each string. Strings are grouped in two sets of four and a series fuse protects the module and string wiring as shown in Figure E-8. The bipolar inverter has the center tap dc input and the ac neutral output grounded. The 120-volt ac output is fed to the service entrance load center (fifty feet away) through a back-fed circuit breaker.

The manufacturer of these thin-film modules has furnished data that show that the maximum Voc under worst-case low temperatures is 24 volts. The multiplication factor of 1.25 on Voc does not apply [690-7(a)]. The design voltage will be 24 x 24 = 576 volts. The module manufacturer has specified (label on module) 5-amp module protective fuses that **must** be installed in each (+ and -) series string of modules.

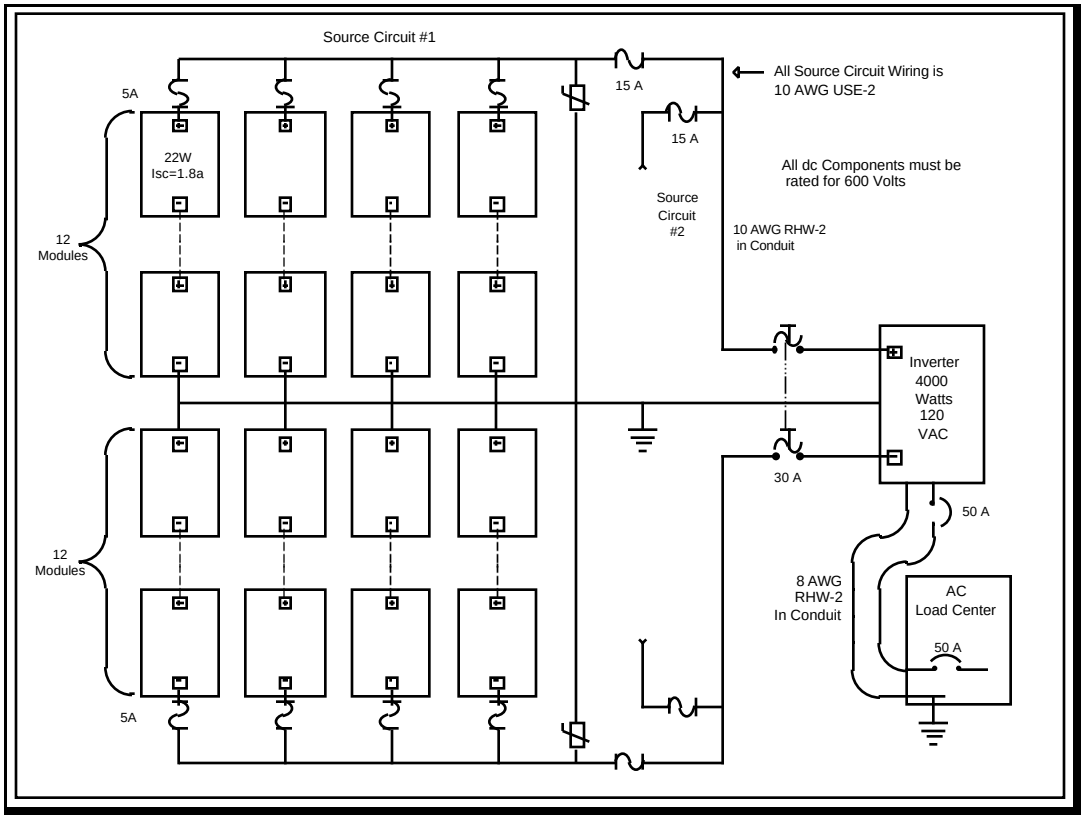

Figure E-8. Center-Tapped PV System

Calculations

Each string short-circuit current is 1.8 amps.

PV 125% (estimated for thin-film modules): 1.25 x 1.8 = 2.25 amps

NEC 125%: 1.25 x 2.25 = 2.8 amps

Each source circuit (4 strings) short-circuit current is 7.2 amps (4 x 1.8).

PV 125%: 1.25 x 7.2 = 9 amps

NEC 125%: 1.25 x 9 = 11.25 amps

The array (two source circuits) short-circuit current is 14.4 amps (2 x 7.2).

PV 125%: 1.25 x 14.4 = 18 amps

NEC 125%: 1.25 x 18 = 22.5 amps

USE-2 cable is used for the module cables and operates at 75°C when connected to the roof-integrated modules. The temperature derating factor in the wiring raceway is 0.41. For the strings, the 30°C ampacity requirement is 5.5 amps (2.25 / 0.41).

Each source circuit conductor is also exposed to temperatures of 75°C. The required ampacity for this cable (at 30°C) is 22.0 amps (9 / 0.41).

Wire size 10 AWG USE-2 is selected for moisture and heat resistance. It has an ampacity of 40 amps at 30°C (90°C insulation) and can carry 35 amps when limited to a 75°C insulation rating. This cable is used for both string and source-circuit wiring. Fifteen-amp fuses are used to protect the string and source-circuit conductors.

The array wiring is inside the building and RHW-2 is used in conduit. It is operated at 50°C when passing through the attic. The temperature derating factor is 0.82, which yields a 30°C ampacity requirement of 22 amps (18 / 0.82). Cable size 10 AWG has an ampacity of 40 amps (90°C insulation) or 35 amps (evaluated with 75°C insulation). Both of these ampacities exceed the 22-amp requirement. Twenty-five amp fuses are required to protect these cables, but 30-amp fuses are selected for better resistance to surges. Since the inverter has high voltages on the dc-input terminals (charged from the ac utility connection), a pull-out fuse holder is used.

The inverter is rated at 4000 watts at 120 volts and has a 33-amp output current. The ampacity requirement for the cable between the inverter and the load center is 42 amps ((4000 / 120) x 1.25) at 30°C. Wire size 8 AWG RHW-2 in conduit connects the inverter to the ac-load center, which is fifty feet away and, when evaluated at with 75°C insulation, has an ampacity of 50 amps at 30°C. A 50-amp circuit breaker in a small circuit-breaker enclosure is mounted next to the inverter to provide an ac disconnect for the inverter that can be grouped with the dc

disconnect. Another 50-amp circuit breaker is back-fed in the service entrance load center to provide the connection to the utility.

The modules have no frames and, therefore, no equipment grounding requirements. The inverter and switchgear should have 10 AWG equipment grounding conductors. The system grounding electrode conductor should be a 8 AWG conductor.

All dc components in the system should have a minimum voltage rating of 600 volts (24 x 24 = 576).

APPENDIX F

DC Currents on Single-Phase Stand-alone Inverters

When the sinusoidal ac output current of a stand-alone inverter goes to zero 120 times per second, the input dc current also goes nearly to zero. With a resistive ac load connected to the inverter, the dc current waveform resembles a sinusoidal wave with a frequency of 120 Hz. The peak of the dc current is significantly above the average value of the current, and the lowest value of dc current is near zero.

An example of this is shown in the Figure F1. This is an example of a single-phase stand-alone inverter operating with a 4000-watt resistive load. The input battery voltage is 22 volts. The figure shows the dc current waveform. The measured average dc current is 254 amps. The RMS value of this current is 311 amps.

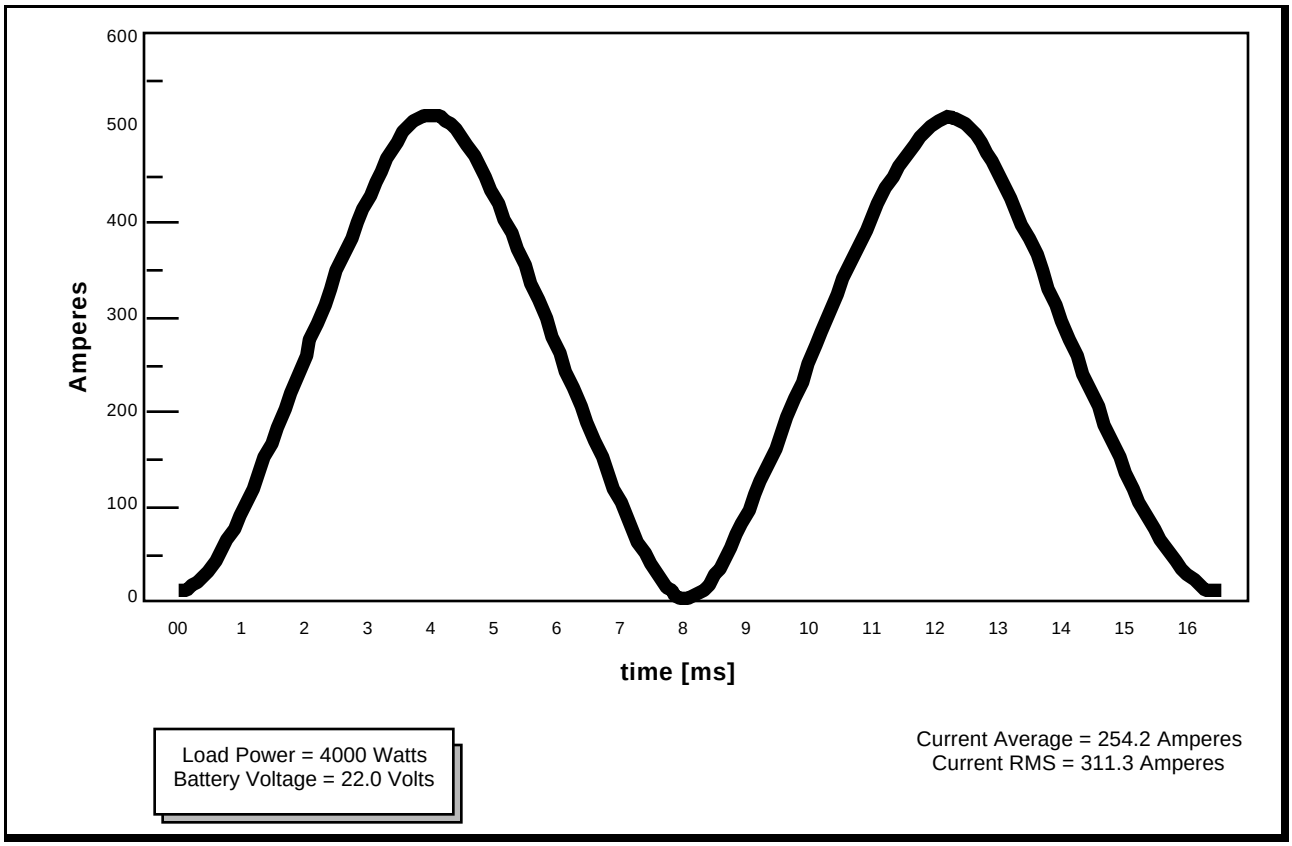

Figure F-1. Inverter Current Waveform (dc side)

The calculated dc current for this inverter (as was done in Example 6 in Appendix E) is 214 amps (4000/22/0.85) when using the manufacturer's specified efficiency of 85%.

The RMS value of current is the value that causes heating in conductors and is the value of current that causes overcurrent devices to trip. In this case, if the inverter were operated at 100% of rated power and at a low battery voltage, the conductors and overcurrent devices would have to be rated to carry 311 amps, not the calculated 214 amps. Code requirements would increase the cable ampacity requirements and overcurrent device ratings to 388 amps (1.25 x 311).

Loads that have inductive components may result in even higher RMS values of dc currents.

The systems designer should contact the inverter manufacturer in cases where it is expected that the inverter may operate at loads approaching the full power rating of the inverter. The inverter manufacturer should provide an appropriate value for the dc input current under the expected load conditions

INDEX

acid, 3, 31, 39, 40

aluminum, 7

amp ratings, 25

ampacity, 2, 6, 7, 22, 23, 24, 25, 27, 31, 41, 51, 52, 53, A3, B3, B4, E1-6, E8, E10, E13-17, E19, E21

array, 8, 14, 15, 16, 18, 20, 22, 26, 27, 30, 31, 35, 37, 50, 55, C1, D2-4, E3-6, E8-10, E12-14, E16-21

batteries, 2, 3, 12, 26, 31, 32, 34, 38, 39, 40, E7, E9, E10, E12, E13, E16

battery, 15, 35, 36, 38, 39, 40

charge controller, 18, 20, 35, 37, 42, 43, 45, E7, E8, E11, E14

circuit breaker, 20, 33, 34, 35, 37, 49, 51, 52, 54, A5-7, C2, D2, D4, E6, E8, E10, E13-21

conductor, 7, 8, 10, 11, 12, 13, 14, 15, 16, 17, 18, 19, 20, 21, 22, 23, 24, 25, 26, 27, 32, 33, 34, 38, 39, 40, 41, 43, 48, 49, 50, 51, 52, 53, 1, 3, 4, 3, 4, A1, A3, B2-4, C1, C2, D3, D4, E1-3, E6, E7, E10-12, E14, E17, E19, E21, E22

conduit, 5, 8, 10, 11, 24, 38, 39, 43, 48, B3, B4, C2, D2, D4, E1-3, E6, E8-10, E12, E13, E16, E18, E21

current rating, 41, A5

dc rating, 30

derating, 8, B4, E1, E8, E10, E13, E15, E16, E19, E21

device rating, 6, 31, 53, D1, E1, E2

disconnect, 1, 2, 4, A5, A6, C1, C2, D2, D4, E3, E5, E8, E9, E11-13, E16, E17, E19, E21

disconnect switch, 16, 32, 37, 45, 53, E3, E8, E13

Electric shock, 38

electric spark, 39

fuses, 2, 27, 29, 30, 31, 32, 33, 35, 41, 45, A3-5, B2, C1-3, D2, D4, E8, E11, E13, E21

generators, 21, 26, 41

Grid-connected, 4, 27, 33, A-2, C-1, D-4, E-17, E-18

ground fault, 49, D2, D3

grounded, 13, 14, 15, 17, 18, 19, 20, 21, 22, 23, 34, 38, 43, 49, C1, C2, D1, E3, E5, E7, E10, E17, E19, E20

ground-fault currents, 15, C2

ground-fault detection, 15

ground-fault device, D4

ground-fault equipment, 53, C1

ground-fault circuit interrupter, 21, 49, E19

grounding, 2, 12, 14, 15, 17, 18, 19, 20, 21, 22, 23, 26, 34, 38, 41, 43, 48, 49, A1, C1, C2, D3, E4, E5, E7, E8, E10, E11, E14, E17, E19, E22

Interrupting Rating, 31

inverter, 17, 19, 20, 21, 22, 24, 25, 29, 33, 35, 38, 41, 44, 49, 51, 52, C1, D2, D4, E1, E12-14, E16-22

junction box, 5, 10, 15, 3, 10, 12, 13, 18

listed connectors, 22

locking connectors, 48

module, 2, 5, 6, 7, 8, 10, 11, 12, 13, 14, 16, 20, 22, 24, 25, 26, 44, A2, A3, B1, B2, B3, B4, C2, D1- 4, E1, E3, E8-10, E12, E13, E17, E20, E21

Module connectors, 12

overcurrent protection, 2, 15, 25, 26, 27, 30, A3, A4, E1, E8, E13, E16, E17, E19

pressure connectors, 12

rating of overcurrent devices, 25

single-pole disconnect, 19

split-bolt connectors, 12

temperature rating, 6, 8, B4, E1, E2

UL-Listed, 3, 10, 27, 29, 30, 32, 34, 35, 43, 44, A3, A6, A7, C2, D4, E1

voltage rating, 26, A2, C1, C5, D1, E1, E4, E7, E11, E14, E17, E19, E22

wire connectors, 12

wiring, 3, 4, 5, 7, 9, 10, 11, 12, 14, 15, 16, 25, 26, 27, 48, 49, 51, B1, C1, D2, E5, E8, E10, E13, E14, E18, E20, E21

DISTRIBUTION LIST

MS-9018	Central Technical Files, 8940-2
MS-0899	Technical Library, 4916
MS-0619	Review & Approval Desk, 15102 For DOE/OSTI